Designing and Installing Solar Commercial Pool Heating Systems

FSEC-IN-23-83
November 1983



Douglass E. Root
Educational Consultant

Florida Solar Energy Center
300 State Road 401
Cape Canaveral, Florida 32920

DESIGNING AND INSTALLING SOLAR COMMERCIAL POOL HEATING SYSTEMS

by

Douglass E. Root

Florida Solar Energy Center
300 State Road 401
Cape Canaveral, FL 32920

©
1983
Florida Solar Energy Center, Cape Canaveral, FL

ACKNOWLEDGEMENTS

The author is indebted to several FSEC staff members for aid in developing the contents of this manual. Some of them are credited in appropriate portions of the text, some are not.

Testing work conducted by Bruce Holbaugh, Jim Huggins and their associates in the collector testing section of FSEC was useful for validating the wind speed modification coefficients.

Extensive computer work by Jim Huggins and Gerald Land established the basis for the nomographs in Chapter 5 (wind speed correction) and Appendix A (insolation/temperature correction).

Previous computer work by Subrato Chandra and Charles Cromer on annual heat loss calculations was organized into the monthly increments presented in appendix G with the assistance of Gerald Land, Magdy Girgis and William Womack.

Mukesh Khattar, Jim Huggins and Magdy Girgis were all of assistance in developing the calculator programs in Appendix F which bear their names

JoAnn Stirling, and in the latter stages of completing the manuscript, Susan Correia, did the word processing and Ingrid Melody the editing of the document. The figures are the result of efforts of the FSEC graphics department, especially Michele Murphy and Richard Thompson.

To all of these contributors and others not mentioned, the author expresses his gratitude.

DESIGNING AND INSTALLING SOLAR COMMERCIAL POOL HEATING SYSTEMS

TABLE OF CONTENTS

			Page
CHAPTER 1	INTRODUCTION AND SUMMARY OF DESIGN PROCEDURE		1-1
CHAPTER 2	DETERMINING THE POOL OR SPA HEATING LOAD		2-1
		INTRODUCTION	2-1
		CONVERTING FROM CONVENTIONAL FUELS	2-1
	2.1.1	Electric Resistance Pool Heaters	2-1
	2.1.2	Oil- and Gas-Fired Pool Heaters	2-1
	2.1.3	Steam-Fired Heat Exchangers	2-2
	2.1.4	Heat Pump Water Heaters	2-2
		CALCULATING HEAT LOSSES FROM SWIMMING POOLS AND SPAS	2-3
	2.2.1	Heat Losses from Pools and Spas	2-3
	2.2.1.1	Conduction Losses	2-4
	2.2.1.2	Convection Losses	2-7
	2.2.1.3	Radiation Losses	2-9
	2.2.1.4	Evaporation Losses	2-12
	2.3	ADJUSTING THE CALCULATED LOSSES	2-14
	2.4	DIRECT GAIN BY POOL SURFACE	2-15
CHAPTER 3	MINIMIZING HEAT LOSSES FROM POOLS AND SPAS		3-1
	3.0	INTRODUCTION	3-1
	3.1	POOL COVERS	3-2
	3.1.1	Opaque Covers	3-2
	3.1.2	Transparent Covers	3-2
		WIND SPEED REDUCTION	3-4
CHAPTER 4	TYPICAL SOLAR SYSTEM CONFIGURATIONS, FLOW CONTROL AND FREEZE PROTECTION		4-1
		INTRODUCTION	4-1
	4.1	PIPING OPTIONS	4-1
	4.1.1	Systems with Low Pressure Drop Across the Collector Array	4-1
	4.1.2	Systems with High Pressure Drop Acress the Collector Array	4-4

		BOOSTER PUMPS	4-5
		Controlling the Pump's Operation	4-5
		FLOW CONTROL VALUES	4-7
		MINIMIZING PRESSURE DROP THROUGH THE COLLECTORS	4-9
	4.5	FREEZE PROTECTION	4-11
CHAPTER 5	METHODS FOR SIZING THE COLLECTOR ARRAY		5-1
	5.0	INTRODUCTION	5-1
	5.1	FACTORS AFFECTING SOLAR POOL HEATER PERFORMANCE	5-1
	5.1.1	Cold Weather	5-1
	5.1.2	Temperature and Insolation Corrections	5-2
	5.1.3	Wind Speed	5-3
	5.1.4	Wind Speed Corrections	5-3
	5.1.5	Methods for Estimating Wind Speed	5-3
		SOLAR COLLECTOR TESTING PROCEDURES	5-4
	5.2.1	Glazed Collectors	5-4
	5.2.2	Unglazed Collectors	5-4
	5.2.3	Collector Performance Graphs	5-5
	5.2.4	Weather Conditions During Pool Heating Season	5-7
	5.2.5	Weather Data	5-8
	5.3	CORRECTION FACTORS FOR WIND SPEED	5-8
	5.3.1	Wind Speed Correction Not Required for Glazed Collectors	5-8
	5.3.2	Wind Speed Corrections Factors for Unglazed Collectors	5-9
	5.3.2.1	Calculator Programs	5-11
	5.3.2.2	Alternative Use of Figure 5.3	5-12
	5.3.3	Wind Speed and Direction	5-14
	5.4	USES FOR THE INFORMATION	5-14
	5.5	EFFECT OF BACK INSULATION ON COLLECTOR OUTPUT	5-15
	5.6	THE SPECIAL CASE OF "PIPE" COLLECTORS	5-15
	5.7	SYSTEM CORRECTION FACTORS	5-16
	5.8	DETERMINING AND MINIMIZING WIND SPEED OVER COLLECTOR SURFACES	5-17

CHAPTER 6	SIZING PUMPS, PIPES AND FILTERS		6-1
		INTRODUCTION	6-1
		SIZING FILTRATION AND CIRCULATION SYSTEMS	6-2
	6.1.1	Filter Sizing Graphs	6-2
	6.1.2	Pump Sizing Graphs	6-3
	6.1.3	Sizing Connecting Piping	6-4
		SIZING A COMPLETE CIRCULATION SYSTEM	6-4
CHAPTER 7	ACCEPTABLE INSTALLATION PRACTICE		7-1
	7.0	INTRODUCTION	7-1
	7.1	FLAT PLATE COLLECTORS	7-1
	7.1.1	Procedures	7-2
		PIPE COLLECTORS	7-7
	7.3	PIPING	7-10
	7.3.1	Piping to Collectors	7-10
	7.3.2	Piping Between Collectors	7-11
	7.3.3	Flow Control and Safety Devices	7-16
	7.4	ACTIVATING THE SYSTEM	7-19
	7.4.1	Purging the System	7-19
	7.4.2	Pressure Testing	7-19
	7.4.3	Testing Control Devices	7-20
	7.4.4	Testing Flow Rates	7-20
	7.4.5	Testing Temperature Rises	7-20
		CLEAN UP	7-21
		INSTRUCTING THE POOL OWNER OR MANAGER	7-21
APPENDIX A	TEMPERATURE/INSOLATION CORRECTION NOMOGRAPHS AND THE METHODOLOGY BEHIND THEIR DEVELOPMENT		A-1
	A.0	INTRODUCTION	A-1
	A.1	IDENTIFICATION OF NOMOGRAPHS	A-1
		DEVELOPMENTAL METHODOLOGY	A-2
	A.3	NOMOGRAPHS FOR INSOLATION/ TEMPERATURE CORRECTION FOR UNGLAZED COLLECTORS	A-5

TYPICAL POINT SPREAD FOR UNGLAZED COLLECTOR CORRECTIONS

NOMOGRAPHS FOR INSOLATION/ TEMPERATURE CORRECTION FOR GLAZED COLLECTORS

TYPICAL POINT SPREAD FOR GLAZED TEMPERATURE CORRECTIONS

APPENDIX B WIND SPEED MODIFICATION DEVELOPMENT METHODOLOGY

B.0 INITIAL ASSUMPTIONS

B.1 CALCULATION OF LOSSES AT "Y" INTERCEPT

B.2 CALCULATION OF LOSSES AT OTHER FLUID PARAMETERS B-4

B.3 TABULATION OF DERIVED EFFICIENCIES

B.4 QUALIFICATIONS

B.5 COMPARISON BETWEEN CALCULATED VALUES AND MEASURED RESULTS

B.6 REFERENCES B-13

APPENDIX C DETERMINING AND MINIMIZING WIND SPEED OVER COLLECTOR AND POOL SURFACES C-1

C.0 INTRODUCTION C-1

C.1 AIRPORT WIND SPEEDS C-1

C.2 DIRECTION OF THE WIND C-1

C.3 EFFECT OF MICROGEOGRAPHY ON WIND SPEED C-4

C.4 VARIATIONS OF WIND SPEED WITH TIME OF DAY C-5

C.5 WIND BEHAVIOR DURING COLD SNAPS C-7

C.6 EFFECT OF BUILDINGS ON WIND SPEED C-7

C.7 WIND SCREENS

C.8 WIND SPEED CONVERSION TABLE

C.9 EFFECT OF PARAPETS ON WIND SPEED

APPENDIX D	APPLYING THE SIZING METHODS		
	D.0	THE DESIGN ASSIGNMENT	
	D.1	THE CALCULATIONS REQUIRED	D-2
	D.1.1	Analyze Energy Consumption	D-2
	D.1.2	Tabulate the Required Weather Data	D-2
	D.1.3	Estimate the Thermal Performance of the Competing Solar Systems	D-4
	D.2	COMPARE THE ECONOMICS OF BOTH PROPOSED SYSTEMS	D-10
	D.3	COMPARE CALCULATOR VS NOMOGRAPH RESULTS	D-10
	D.4	UNCERTAINTIES ASSOCIATED WITH USING "AVERAGE" VALUES	
	D.5	THE RELATIONSHIP BETWEEN SYSTEM SIZE AND ENERGY AND DOLLAR SAVINGS	D-12
APPENDIX E	INSOLATION AND TEMPERATURE DATA FOR EIGHT FLORIDA CITIES		
	E.0	INTRODUCTION	
	E.1	TABULATED WEATHER DATA	E-3
		SUMMARY OF WEATHER DATA	E-11
APPENDIX F	CALCULATOR AND COMPUTER PROGRAMS		F-1
APPENDIX G	TABULATED HEAT LOSS FACTORS FOR SWIMMING POOLS IN SIX FLORIDA CITIES		G-1

CHAPTER 1

INTRODUCTION

Solar heating of swimming pools is an economically attractive utiliza- of Florida's abundant solar resource The temperature requirement is lower than that for domestic or service water heating, lower than that for building heating and far lower than that for solar powered air conditioning Florida's year-round mild and sunny climate allows swimming during much of the winter, so a properly heated pool is economically attractive

Because the difference between ambient air temperature and desired pool temperature is comparatively low, relatively inexpensive unglazed solar collectors can effectively heat swimming pools However, in commercial pool heating applications, glazed collectors may be justified This can be determined through calculating the heating load and solar system output based on average weather conditions at the pool site. In some cases, the higher initial cost of an array of glazed collectors is offset by future fuel savings.

The design and installation of solar swimming pool heaters can be aptly described as more art than science Many of the design calculations require the input of data that is subjectively judged to be appropriate by the designer. For example 1) wind speed over the surface of the pool greatly affects evaporation and convection losses. These in turn are major contributors to the total heat loss. Heat loss determines the load that a heater of any kind must meet Micro-climatic conditions, the location of man-made structures, and inconsistancies in seasonal weather variations make it difficult to select appropriate wind speed data and to accurately calculate the heating load

2) Unglazed solar collecting surfaces are tested in accordance with ASHRAE 96-80 Thermal Test procedure. They are rated by FSEC in terms of their calculated performance during a "standard Florida day" -- 1600 Btu/ft^2, 81°F average air temperature and 95°F average solar collector temperature However, when pool heating is required in Florida the air temperature may be well below 81°F, the average collector temperature may be below 95°F, and the insolation rate may be above or below 1600 Btu/ft^2 day. Additionally, the performance of unglazed collectors is substantially reduced by cold winds blowing across their surfaces. Their performance equations, graphs and low-temperature ratings do not disclose this fact because the ASHRAE 96-80 test procedure is conducted at wind speeds of less than 3 mph. 3) Swimming pools which are not shaded from about 4 hours before until 4 hours after solar noon pick up 1000 to 1500 Btu/ft^2 of pool area each day by direct absorption of the sunshine which falls on their surfaces Yet a screen room reduces that gain by 30-40%. These facts introduce uncertainties in evaluating the output which may be expected of an array of solar collectors. Thus, a working knowledge of their effect is critical to sound system design.

This design manual attempts to address these and other peculiarities of solar swimming pool and spa heating and presents methods for quantifying losses, gains, solar collector contribution and system performance Simplified collector rating methods (nomographs and tables) that are reasonably accurate are presented for the first time in an FSEC publication Graphical aids which enable the designer to convert weather station wind data to specific airflow rates on top of or in the vicinity of a variety of sizes and shapes of buildings are included

text is divided into chapters on load evaluation, energy conservation techniques, commonly used piping configurations flow control and freeze protection strategies, the effect of solar intensity and air temperature on collector efficiency, the effect of wind speed on unglazed collector output, array sizing methods, pump, piping and filter sizing and accepable installation practices.

Appendixes include a number of nomographs which simplify the required engineering calculations and an explanation of the derivation of the methodology suggested in the text, calculation of air flow rates over both the pool and collector surfaces, and weather data. The weather data presented is for Florida cities only but such data is available for cities in other states from the National Oceanic and Atmospheric Administration The address of that organization is given on page C-7

Illustrative problems have been included where it was felt they would clarify critical design concepts. Because this manual is specifically written for trained professionals, theoretical treatment of the various aspects of solar pool heating is limited to the minimum required for their understanding of the processes described Those interested in more indepth descriptions of solar pool and spa heating theory are referred to other FSEC publications (especially "Solar Water Heating and Pool Heating Manual") and "Solar Heating for Swimming Pools," which is available from the Environmental Information Center (EIC), Winter Park, Florida

Some elements of this manual appear in other Florida Solar Energy Center (FSEC) publications, some are adapted from "Solar Heating for Swimming Pools" published by EIC, and many appear for the first time in this publication

SUMMARY OF DESIGN PROCEDURE

The following design procedure includes chapter and in some cases references to detailed methodology Options for some steps are suggested in decreasing order of desirability

Step 1 Determine the pool heating load for each month during which heating may be required by:

A Using historical energy consumption records if they are available Refer to pages 2-1 to 2-3

B Using FSEC tabulated heat loss factors for various pool configurations in six representative Florida cities Refer to pages G-1 to G-8

C. Performing heat loss calculations based on accepted heat and mass transfer formulas. Refer to page 2-4 to 2-16

2 Determine the monthly contribution which may be expected from a specific collector(s)(it varies from month to month) Do this by

A Using the predicted daily output of the collector(s) as determined by FSEC calculator or computer programs. Refer to Appendix F Pages F-1 to F-11

B Using the predicted daily output of the collector(s) as determined from FSEC nomographs Refer to appendix A pages A-1 to A-18 and pages 5-9 to 5-13 in the main body of the text.

The required temperature and insolation data appears on pages E-1 to E-13

3 As a first approximation, size a collector array based on 80% of the January heat losses from the swimming pool and the January output of the collector(s) under consideration

Collector area (ft^2) =

$$\frac{.8 \times \text{January loss (MM Btu/mo per 100 ft}^2\text{)} \times \text{Pool Area (ft}^2\text{)}/100}{\text{Collector Output (Btu/day} \cdot \text{ft}^2\text{)} \times 31 \text{ days}/1{,}000{,}000}$$

Step 4 Select a system penalty factor Increase the collector area to compensate for the system penalty which has been selected.

$$\frac{\text{Collector area (ft}^2\text{)}}{\text{Penalty factor}} = \text{Corrected Collector area (ft}^2\text{)}$$

Refer to page 5-16

5: Determine the load (monthly pool losses) for each month during which pool heating is required. As a rule of thumb, some heating will be required to maintain an unshaded, unscreened pool at 78°F if the average (24 hour) air temperature for the month is less than 75°F.

Step 6: Determine monthly the output of the corrected collector area for the temperature and insolation conditions for each of the months during which pool heating is required. Then apply the system penalty to determine the monthly system output.

Step 7 Determine the annual energy and fuel cost savings based on the lessor of monthly load or monthly solar system output

Step 8 Estimate the solar system cost (including pumps, controllers etc.) and calculate return on investment (based on current or projected energy cost information).

$$\frac{\text{Annual fuel costs saved} \times 100}{\text{System cost}} = \% \text{ return}$$

Step 9: By repeating the above eight steps for, say, 60, 70, 80, 90 and 100 percent of the January load, an array size which yields the best return on initial investment may be determined

CHAPTER 2

DETERMINING THE POOL OR SPA HEATING LOAD

INTRODUCTION

Because the magnitude of the heating load forms the basis for subsequent sizing decisions it is important to determine that load as accurately as possible

When converting from conventional heating to solar heating of a pool historical energy consumption records (if available) may be used to estimate future heating requirements. When designing a solar pool heating system for a new pool, it is often possible to use energy consumption data from a nearby pool as a basis for estimating the energy requirement of the proposed installation Energy consumption may differ significantly between pools, but if they are similarly situated, sized, exposed to sunlight and protected from the wind, this is usually not the case

2.1 CONVERTING FROM CONVENTIONAL FUELS

2.1.1 Electric Resistance Pool Heaters

Electric resistance pool heaters usually operate with an efficiency approaching 100% If they have been metered separately the energy consumption may be calculated by using the following formula

Btu/time period = 3413 x kWh/time period

2.1.2 Oil- and Gas-Fired Pool Heaters

Gas- and oil-fired pool heaters more often operate at 50-75% fuel conversion efficiency in field service than the 80±% efficiency they exhibit

in laboratory tests FSEC recommends the use of a 70% conversion factor unless a substantial body of field data supports higher claims The aver-

energy content of commonly used liquid and gaseous fuels is given in Table 2

Table 2.1
Energy Content of Oil and Gas

Fuel	Energy Content
LPG (Propane)	92,000 Btu/gal
Natural gas	100,000 Btu/therm
Light home heating oil	140,000 Btu/gal

following formula may be used to calculate the energy furnished by gas- and oil-fired heaters

Btu/time period = 0.7 x Btu content/unit x units/time period

2.1.3 Steam-Fired Heat Exchangers

If steam from a central boiler and a heat exchanger have been used to heat a pool or spa, sufficient data may exist to calculate the pool heat-

load from the manufacturer's data on the heat exchanger effectiveness and steam quality and consumption data If such is not the case, weather data may be used to estimate the heat losses from the pool during the heating season

2.1.4 Heat Pump Water Heaters

Dedicated heat pumps (also called heat pump water heaters) are manufactured specifically for swimming pool and spa heating Coefficients of performance (COP of 4 to 8 are claimed by several of their manufactures

If the energy input of such units is separately monitored, the following formula may be used to calculate their thermal output

Btu/time period = kWh/time period x 3413 x COP

2.2 CALCULATING HEAT LOSSES FROM SWIMMING POOLS AND SPAS*

In the absence of reliable, historical, energy-consumption data, it may be convenient to calculate the heat losses which may be expected to occur from a pool under various monthly weather conditions These losses then may be equated to the pool's average energy requirement for a given increment of time Past records of monthly average air temperatures, humidities, and pool temperatures may yield sufficiently accurate results for some purposes For other purposes, it may be necessary to make calculations based on daily weather data and sum them to arrive at monthly totals Weather data for eight Florida cities is contained in Appendix E Because the calculation procedure required is somewhat tedious, tables containing loss factors for six Florida cities and several pool configurations have been developed and are presented in Appendix "G". Appropriate monthly values may be multiplied by pool areas and to arrive at total monthly losses

2.2.1 Heat Losses from Pools and Spas Heat Losses from a swimming pool or spa may be attributed to four mechanisms

1) Conduction through the pool walls.
2) Convection from the pool surface

*Adapted from "Solar Heating for Swimming Pools", published by the Environmental Information Center, Winter Park, FL.

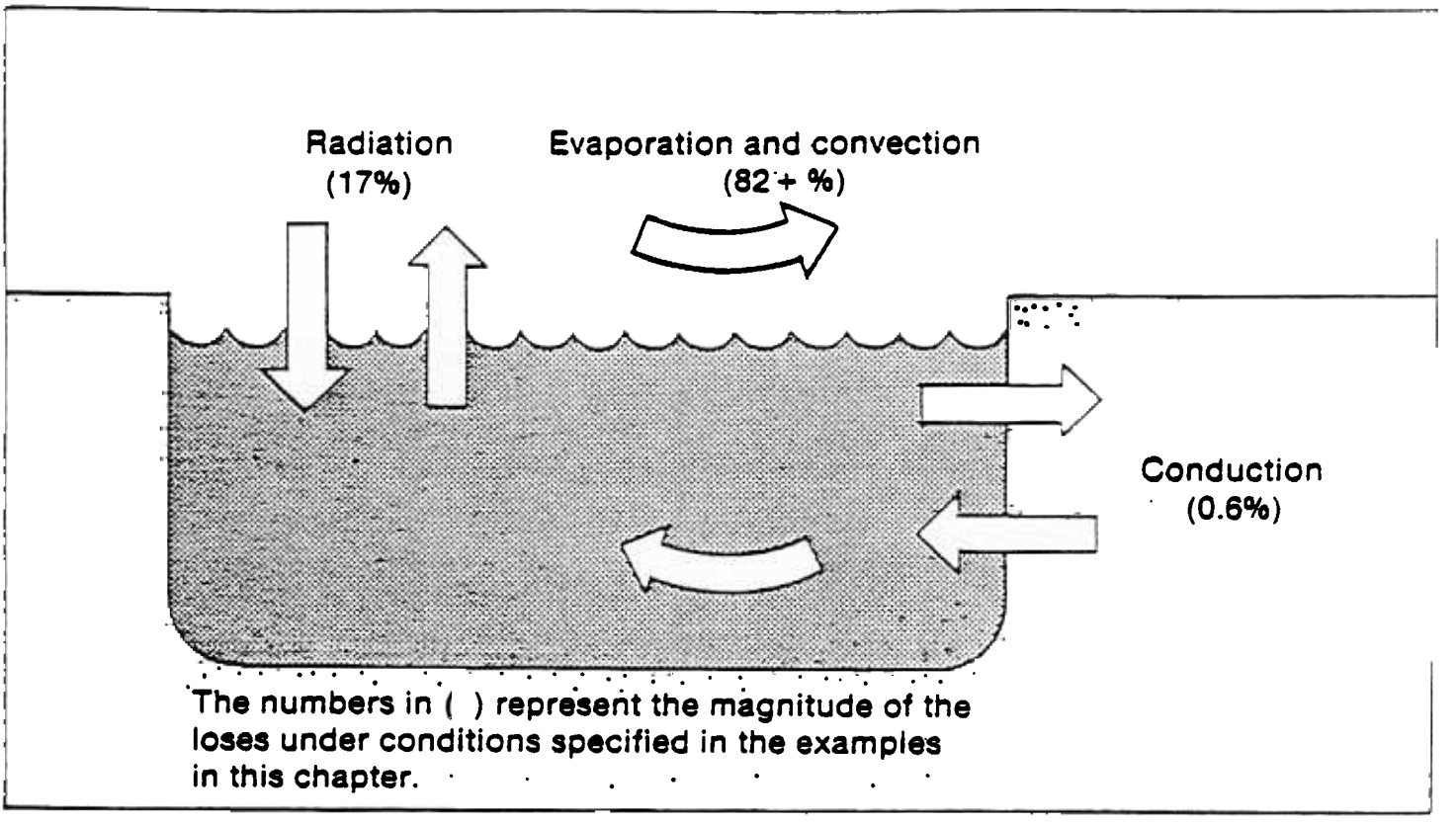

Figure 2.1

Pool Heat Loss Mechanisms

3) Reradiation from the pool surface

4) Evaporation from the pool surface Figure 2.1 shows the loss mechanisms and relative magnitudes for swimming pools

2.2.1.1 Conduction Losses -- Because most soils are poor conductors of heat, losses through the bottoms and sides of below-grade pools are usua ly small enough to ignore. However, if pools are situated where cold groundwater flows past them, the following formula and heat transfer coefficients may be used to estimate the losses The same formula may be used to estimate wall losses from above-ground pools

$Q_c = U \times A \times \Delta t$

where

Q_c is the conductive loss in Btu/hr,

U is the overall conductive heat transfer coefficient in Btu/ft^2/hr (per °F), and

A is the pool wall area in square feet (plus the area of the pool bottom in the case of below-grade pools)

For below-grade pools:

Δt is the pool temperature minus ground water temperature

For above-ground pools:

Δt is the pool temperature minus air temperature

Below Grade Pools: Even under conditions of rapid groundwater flow, the soil close to the pool shell will rise in temperature as it absorbs heat from the pool This reduces the temperature difference (Δt) Because it is difficult to evaluate this reduction from individual situations, the following U values for both concrete and fiberglass walls have been modified using experimental data developed by ASHRAE engineers for uninsulated cement basement floors The U values are for use with actual pool and groundwater temperature differences

U = 0.1 for 4-in concrete pool walls with a 1-in. marble-cement waterproof inner lining, and

U = 0.1 for ½-in (nominal) fiberglass-reinforced plastic pool walls

The two values are, for our purposes, the same. This is because the main resistance to heat flow is not in the wall, but is in the soil surrounding it

EXAMPLE A 30' x 45' concrete pool with an average depth of 5 feet is located at a canal-front motel in a Florida coastal city The motel manager wants to maintain the pool to 80°F during November when the groundwater is 70°F Calculate the conductive losses.

$$Q = 0.1 \times [(30' \times 5' \times 2) + (45' \times 5' \times 2) + (30' \times 45')] \times (80° - 70°) = 2100 \text{ Btu/hr}$$

(b) Above-ground Pools: If the bottoms of such pools rest firmly on the ground, heat loss through them may be ignored. However, losses through the walls of above-ground pools may be large enough to require consideration. The following overall coefficients include the insulating effect of the static air film at interface of the air and support wall

For vinyl pool liners supported by uninsulated, corrugated metal shells:

U = 2 for 0-mph wind speeds,

U = 4 for 7-mph wind speeds, and

U = 6 for 15-mph wind speeds.

If an inch of foam insulation is applied to the outside of the supporting shell, U = 0.1. For vinyl pool liners supported by 1-in thick wood walls, U = 0.8 (7 mph average wind speed). For above-ground ½-in fiberglass-plastic walls supported by an open framework of wood or metal tubing, U = 1.9 (7-mph average wind speed).

EXAMPLE: A round, above-ground pool, 4 feet deep and 18 feet in diameter, is subjected to 65°F winds blowing a 7 mph. If the pool temperature is 80°F and it is supported by an uninsulated corrugated metal wall how much heat is lost through the wall each hour? ($\pi = 3.14$, and losses through the pool bottom may be ignored.)

$Q = 4 \times 4' (3.14 \times 18') \times (80° - 65°)$

$= 13,565$ Btu/hr

A little data interpretation is called for here. About one half of the pool wall is protected from the 7-mph wind, so the loss coefficent is nearer to 2 on the leeward side of the pool. Therefore, the actual losses are closer to 10,000 Btu than 14,000 Btu

The actual loss may be less than the higher calculated value, however, the example indicates that insulating the walls of this above-ground pool may be well worth the cost if the pool is to be heated

2.2.1.2 Convection Losses. The convection losses may be evaluated using the formula

$$= h_{cv} A \Delta t$$

where:

is the convective heat loss in Btu/hr,

is the convective transfer coefficent in Btu/ft^2/hr (per °F)

$1 + .3 \times$ wind speed (mph)

A is the pool area in ft^2, and

Δt is the temperature difference between the pool and the air.

It is important to understand that the rate of convective transfer varies with both the temperature difference and the wind speed, and is dependent on a series of resistances to heat transfer Any heat which escapes from the pool by convection must pass through a thin but static liquid film at the pool surface It then must pass through a thin but static layer of air in contact with the liquid surface. It next passes through a boundary layer of eddy currents in the air, and finally is taken up by the main

airstream where it is carried away from the pool by either natural or forced convection The transmission of heat through the thin fluid layers themselves is by conduction

The thickness of the static air layer affects the rate of heat loss and varies greatly with wind speed Not only is this complex process difficult to quantify but there are additional barriers to accurate analysis

Convection, radiation and evaporation occur simultaneously across the air to water interface The evaporation process reduces the temperature of the liquid surface because it draws virtually all of the 1050 Btu/lb of water required for the phase change from the pool water, not the air above it. The convective process cools the liquid surface if the air is cooler than the surface and warms it if the air is warmer than the surface

It should be remembered that under conditions of moderately high wind speed, low humidity, and low air temperature, the surface of the pool will be cooled by both evaporation of water and convection. This will have a tendency to reduce the temperature difference between the pool surface and the wind sweeping over it Theoretically the pool surface can be cooled to the wet-bulb temperature of the air (Practically, because of the large quantity of heat available to the pool surface from the pool itself this will almost never occur.) However, under windy, low temperature low humidity conditions you may wish to utilize a compromise pool surface temperature mid-way between measured pool temperature and wet-bulb temperature of the air or apply a correction factor as suggested on Page 2-14 The wet-bulb temperature may be read from Figure 2.2

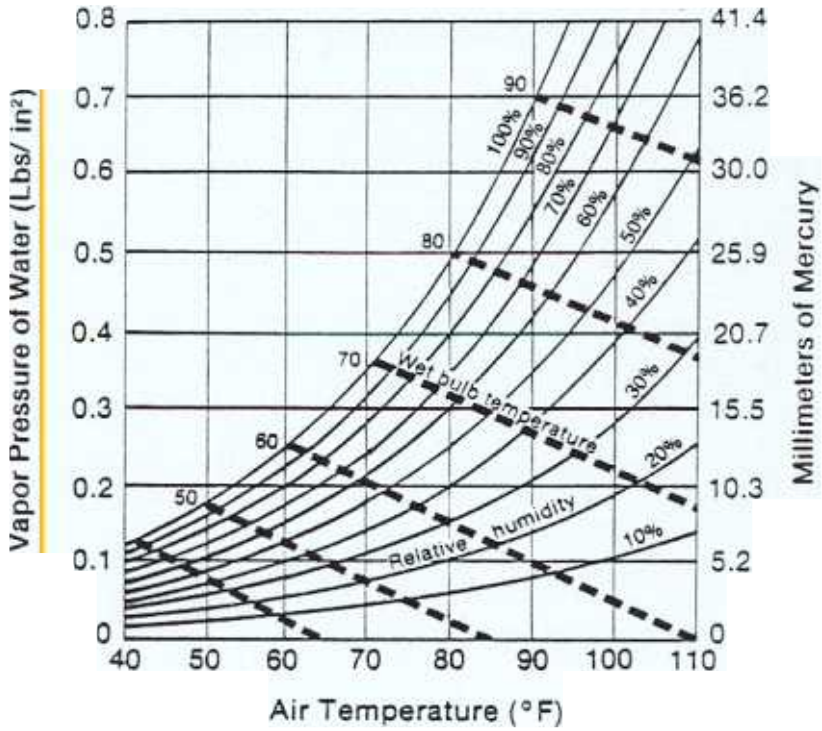

Figure 2.2

Psychrometric Chart

EXAMPLE: The 80°F, 30' x 45' pool described in the first example is exposed to a 16-mph 65°F north wind at 50% relative humidity It is protected by motel buildings on the north and surrounded by a 6 ft privacy fence. These reduce the effective wind speed at the pool surface to 4 mph. Calculate the convective heat loss in Btu/hr. Ignore surface temperature depression because of evaporation.

$$[1 \quad 4(.3)] \times (30' \times 45') \times (80° - 65°) = 44{,}550 \text{ Btu/hr}$$

2.2.1.3 Radiation Losses. The following formula is sometimes used to evaluate losses through radiation from a warm pool to a cool sky;

$$Q_R = 0.73\ A\varepsilon\left[\left(\frac{t_w}{100}\right)^4 - \left(\frac{t_{sky}}{100}\right)^4\right]$$

where

Q_R is the radiation loss in Btu/hr

A is the exposed surface area of the pool in ft^2,

ε is the emissivity of pool water ($\cong 0.90$

t_w is the pool temperature in °Rankine (°F + 460°)

Without introduction of serious error, the value for t_w may be assumed to be the pool temperature. Some judgment is called for in estimating t_{sky}. For example, on a very cloudy night the clouds may be only 10°F below the temperature of the air; the pool radiates to those clouds On a very clear night, because the pool radiates both to the clear atmosphere and to outer space, the effective sky temperature may be as much as 80°F below air temperature

It is difficult to select the proper sky temperature for use in this formula (unless you have access to a remote sensing infrared thermometer) Many experts agree that, on average, the sky temperature is about 20°F cooler than the ambient temperature However, on very clear cool nights, even in areas of moderately high humidity such as Cocoa Beach Florida, remote sensing infrared thermometers pointed skyward have indicated a temperature below their lower limit (-40°F), or at least 80°F below ambient air temperature While very clear nights are infrequent in Florida, they are common in many other parts of the country

For your convenience,

$\left(\frac{t(°R)}{100}\right)^4$ (radiation parameter)

values are presented in Table 2.2

Table 2.2
Radiation Parameter vs. Temperatures (°F)

t(°F)	-20	-15	-10	-5	0	5
Value	375	392	410	429	448	468
t(°F)	10	15	20	25	30	35
Value	488	509	531	553	576	600
t(°F)	40	45	50	55	60	65
Value	625	650	677	703	731	760
t(°F)	70	75	80	85	90	95
Value	789	819	850	882	915	949
t(°F)	100					
Value	983					

EXAMPLE: The previously described 30' x 45' pool which the motel manager wishes to maintain at 80°F, is exposed to clear skies on a 55°F night. The relative humidity is 50%, the cloud cover is 10%, and the latitude is 30°N Calculate the radiant heat loss

Because of a 10% cloud cover, moderate nighttime temperature (55°F), and fairly high relative humidity, the sky temperature should be about 20°F below ambient air temperature We will try several sky temperatures to see how they affect the estimated radiation loss

If we assume the sky temperature to be 10°F below the air temperature, $t_{sky} = t_{air} - 10°F$

$$= 0.173 \times (30' \times 45') \times 0.9 \times \left[\left(\frac{80° + 460°}{100} \right)^4 - \left(\frac{45° + 460°}{100} \right)^4 \right]$$

From Table 21

$$= 210 [850 - 650] = 42{,}000 \text{ Btu/hr}$$

Assume: t_{sky} $t_{air} - 20°$

$= 210 [850 - 600] = 52,500$ Btu/hr

Assume $t_{sky} = t_{air} - 30°$

$= 210 [850 - 553] = 62,370$ Btu/hr

Assume: $t_{sky} = t_{air} - 40°$

$= 210 [850 - 509] = 71,610$

Assume: $t_{sky} = t_{air} - 50°$

$= 210 [850 - 468] = 80,220$

2.2.1.4 Evaporation Losses The quantity of heat lost through evaporation from a pool surface usually exceeds that lost by conduction, convection, and reradiation combined A simple formula may be used to evaluate the loss:

$$= L_w \quad K_E \times \Delta P$$

where:

is the evaporative heat loss in $Btu/ft^2 \cdot hr$

L_w is the latent heat of evaporation of water at the temperature of the pool surface $\cong$ 1050 Btu/lb,

is the appropriate mass transfer coefficient expressed in $lb/hr \cdot ft^2$ (per $lb/in^2 \Delta P$)

$\cong 0.1 \times h_{cv}$; $h_{cv} = 1 + .3 \times$ wind speed (mph)*

ΔP is the partial pressure exerted by the pool surface minus the partial pressure exerted by the moisture in the air (psi)

As has been stated in the paragraph on convective losses, the pool surface temperature is between the average temperature of the entire pool and that of the air. When windy, cool, low-humidity conditions prevail,

*See Appendix C for methods of reducing the wind speed over the pool's surface.

the use of a pool surface pressure corresponding to a compromise temperature between pool temperature and wet-bulb air temperature may yield more accurate results or the correction factor on Page 2-14 may be applied.

Figure 2. should be examined to envision better the nature of evaporation from the pool surface The vertical lines represent measured air or pool temperatures. The horizontal lines represent partial pressures in psi on the left and in mm of mercury on the right. The curved lines extending upward and to the right represent relative humidity conditions The vapor pressure of the pool surface at a specific temperature is found from the intersection of a vertical line through that temperature with the 100% relative humidity curve. The wet-bulb temperature of air is represented by the lines which slope down and to the right.

If a horizontal line is drawn through the intersection of the 75°F air temperature lin the 100% relative humidity (RH) curve, any air condition which results i a partial pressure lower than about 0.44 psi or about 22.8 mm Hg and wil allow evaporation to occur from a 75°F pool. The greater the distance below that line, the more rapid the evaporation. Air that exerts the sam partial pressure (for example 83°F air at 80% RH or 87°F air at 70% RH) will prevent evaporation from taking place from the pool surface Interestingly enough, air which exerts more partial pressure than 0.44 psi may lose some of its water vapor to the pool by condensation. In this fairly unusual situation the pool will gain 1050 Btu for each pound of water vapor that condenses on its surface

EXAMPLE: Calculate the evaporative heat loss (in Btu/hr) from the 80°F, 30' x 45' pool previously considered if it is exposed to 65°F air at 50%

relative humidity sweeping over the water surface at 4 mph Ignore the depression of surface temperature caused by evaporation

q_e = 1050 x 19 x 2.2 (.50 - 15)

154 Btu/ft^2·hr

Q_E = 154 (30 x 45) = 207,900 Btu/hr

The values for ΔP may be read from Figure 2.2, where 0.50 psi corresponds to 100% relative humidity at 80°F, the partial pressure of the pool water, and 0.15 psi corresponds to 65°F air at 50% relative humidity

Strictly speaking, the quantity of water evaporating from an exposed surface is not a linear function of the area of that surface. W.J Humphreys documents the fact in Physics of the Air, McGraw-Hill Book Co., Inc., NY and London, 1940 However, the empirical equation used above yields results within 5% of those from an equation developed by Fitzgerald in the late 1800s and recommended by Dr Humphreys, a noted meteorological physicist

2.3 ADJUSTING THE CALCULATED VALUES

Measurements made on swimming pools in Florida have convinced several FSEC researchers that the calculated losses are about 40% higher than those that occur during typical Florida weather (if average pool and air temperatures are used in the calculations). Consequently, it is FSEC's recommendation that the calculated values be multiplied by a factor of 0.6

EXAMPLE The relationships among and totals for the previously calculated losses are

Conduction 2100 Btu/hr x 24 hrs x 0.6 = 30,240 (below-grade pool) Btu/day

Convection: 44,550 Btu/hr x 24 x 0.6 = 641,520 Btu/day

Radiation 52,500 x 24 x 0.6 = 756,000 Btu/day; $t_{sky} = t_{air}$ 20° (assumed)

Evaporation 207,900 x 24 x 0.6 = 2,993,760 Btu/day

Total Losses 4,421,520 Btu/day

Conduction = 0.6%

Convection = 15%

Radiation = 17%

Evaporation = 68%

2.4 DIRECT GAIN BY POOL SURFACE

Most swimming pools are located so as to be in direct sunlight most of the day. Under these conditions they are very effective heat collectors absorbing about 75% of the solar energy that strikes their surfaces

EXAMPLE The average insolation of the surface of the pool in the previous example during November is 1300 Btu/ft^2·day. Direct solar gain = 1300 x (30 x 45) x .75 = 1,316,250 Btu/day gain. (A screen room reduces this input by 30-40%.) Obviously, a sunny location not only increases swimming comfort but also substantially reduces pool heating costs (by nearly 1/3 during November in this example).

The previous calculations indicate that the pool cited in the example will require the addition of 4,421,520 - 1,316,250 = 3,105,270 Btu/day to maintain 80°F water temperature during average weather Cold snaps or unseasonably warm weather obviously will alter daily energy requirements

The energy requirement for November will average out at 3,105,170 Btu/day x 30 93 million Btu/mo. If natural gas costs $.51/therm, the November fuel costs will average

$$\frac{93 \times 10^6 \times \$.51}{100{,}000 \times .7 \text{ (heater efficiency)}} = \$677.57$$

if the pool is neither shaded nor enclosed by a screen room

If the pool is partially or totally shaded during a portion of the day, the direct gain should be reduced proportionately

CHAPTER 3

MINIMIZING HEAT LOSSES FROM POOLS AND SPAS

3.0 INTRODUCTION

Before drawing on any external source of energy to supply heat for a pool or spa, energy conservation should be maximized

Conduction losses through walls and floors of below-grade pools are so low that efforts to increase the insulation value of the pool shell are not economically justified. However, significant heat losses occur from the pool surface, (Figure 2.1) so substantial energy savings are possible if the pool is covered during even a portion of the day. Correctly siting the pool and protecting it from wind also can impede heat losses (Figure 3.1

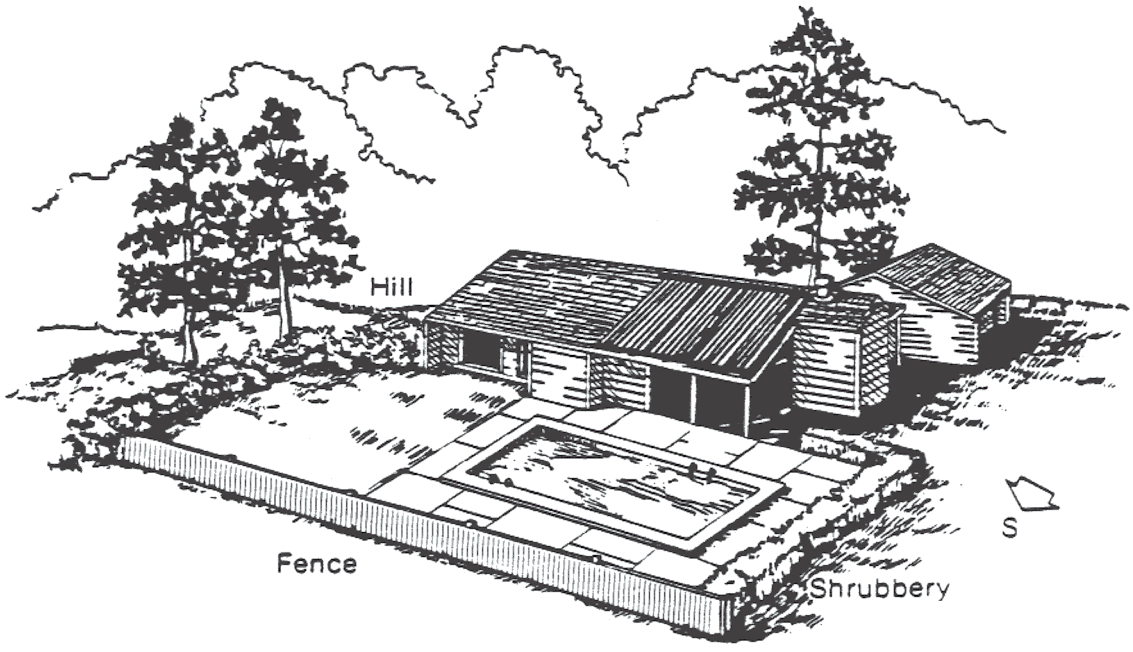

Figure

Siting the Pool to Minimize Heat Losses

POOL COVERS

Removable covers can reduce evaporation, convection and radiation losses, but they should be designed so that they do not reduce incoming solar radiation interfere with pool use, or present safety hazards

There are three types of pool covers in widespread use: 1) opaque, skinned, foam covers; 2) bubble-studded, transparent covers and 3) transparent films Figure 3.2 depicts these covers. Liquid evaporation retardants also are used on a limited basis. These cover the pool surface with a very thin liquid film which retards evaporation

Opaque Covers

Some opaque foam covers have R values as high as R12, but most of them have far lower resistance to heat transfer (R-1 to R-2) They usually are used on pools which must remain uncovered during daylight hours or on spas or hot tubs, which are maintained at relatively high temperatures (100°F). While in place, these covers virtually eliminate evaporation losses (68% of the total loss in the example in Chapter 2) and substantially reduce convection (15%) and re-radiation (17%) losses. However, they are expensive, heavy and generally more difficult to emplace and remove than are bubble-studded or transparent film covers Additionally, their opacity prevents direct solar gain

3.1.2 Transparent Covers

Transparent covers are made of ultraviolet-inhibited polyethylene, polyvinyl chloride, and a variety of related copolymers. They also eliminate evaporation losses

Manufacturers of bubble-studded covers assert that the dead air space covering as much as 75% of the cover surface reduces both convection and radiation losses Bubble-studded covers occupy more storage volume than do single film covers and they should be shaded when stored to prevent heat buildup that can cause the inner bubbles to expand and rupture

Bubble-studded and single film covers admit sunlight and often are used on swimming pools that may remain covered during some daylight hours They are less expensive than foam covers but they also are less durable, lasting for only one to five years in most Florida applications Their chief assets are their relatively low cost and their ability to reduce evaporation losses without reducing direct solar gain Analytical work on the functionality of transparent pool covers has been done by Francey Golding and Clark and reported in Vol 25, No 5 (1980) and Vol 26, No 3 1981) of Solar Energy.

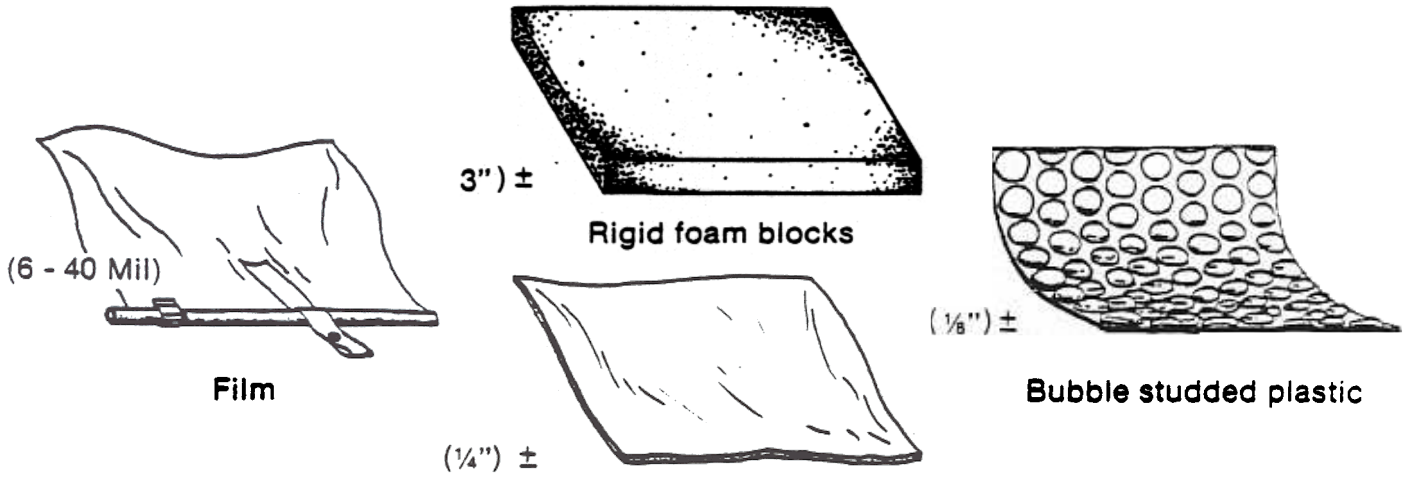

Figure 3.2

Pool Covers

3.2 WIND SPEED REDUCTION

Reducing wind speed over the pool surface reduces both evaporation and convection losses Wind breaks usually are highly cost effective because they are relatively inexpensive, do not interrupt the sunlight but do reduce the wind speed over the pool surface (Usually some kind of fencing is required for safety purposes.) Appendix C of this manual addresses the effect of man-made structures on wind speeds The solar designer or installer should apply the principles and formulas presented there when selecting pool locations to ensure that the pool will be protected from the full force of prevailing winds during the portion of the year when the pool will require heating

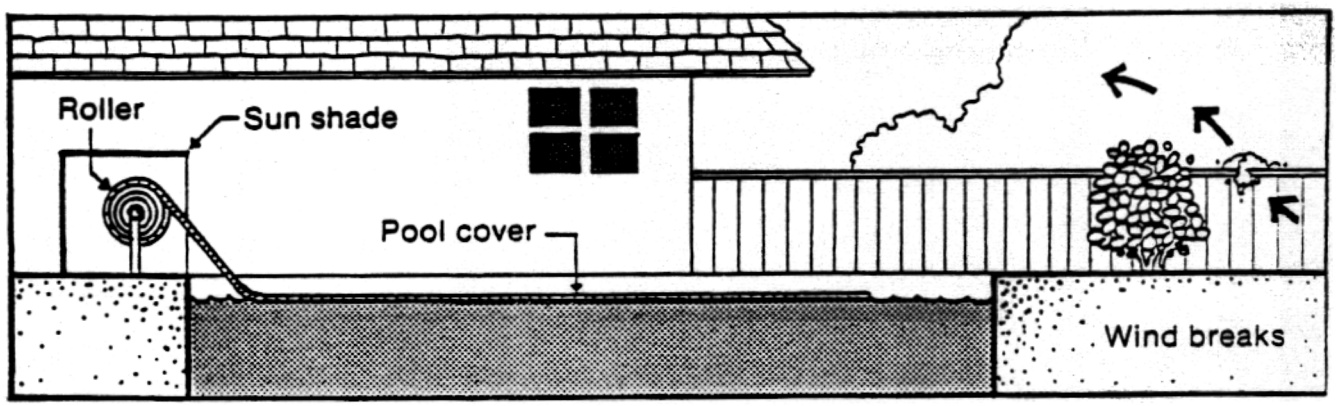

Figure 3.3

Pool Cover Plus Wind Breaks

CHAPTER 4

TYPICAL SOLAR SYSTEM CONFIGURATIONS, FLOW CONTROL AND FREEZE PROTECTION

4.0 INTRODUCTION

If a pool or spa heating system is to operate efficiently the most appropriate piping configuration, flow control method and freeze protection strategy must be chosen

4.1 PIPING OPTIONS

Solar pool heaters usually are connected to existing pool plumbing systems A schematic of a frequently used pool filtration loop is shown in Figure 4.1a. The pump draws the water from the skimmer and main drain, forces it through the filter and returns it to the pool through the conventional heater Debris-catching strainers usually are installed ahead of the pump Solar pool heating systems usually consist of 1 an array of black pipes or tiles, 2) an expanse of solar mat, 3) a number of plastic sheet or metal absorbers or 4) conventional glazed and insulated solar collectors They are interconnected to the pools filtration and circulation system in one of the following ways

4.1.1 Systems with Low Pressure Drop Across the Collector Array

Solar systems designed to operate with small pressure losses can be added as shown in Figure 4.1b. A spring-loaded check valve is installed downstream from the filter to prevent collector water from backwashing through the filter and flushing trash into the pool from the strainer when the pump is shut down. A manually operated or

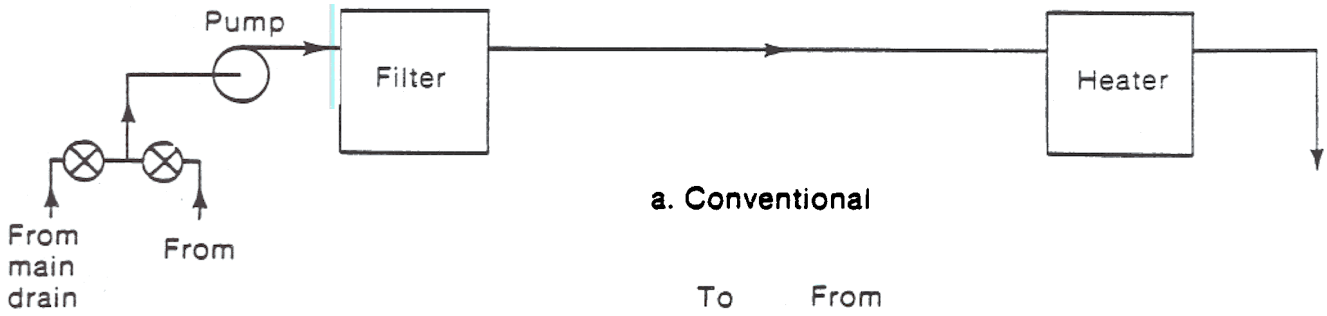

a. Conventional

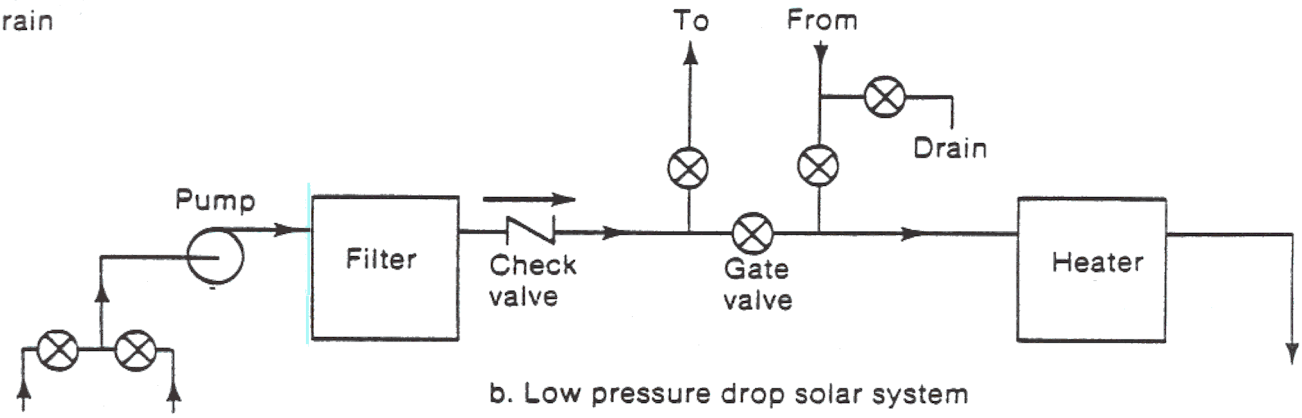

b. Low pressure drop solar system

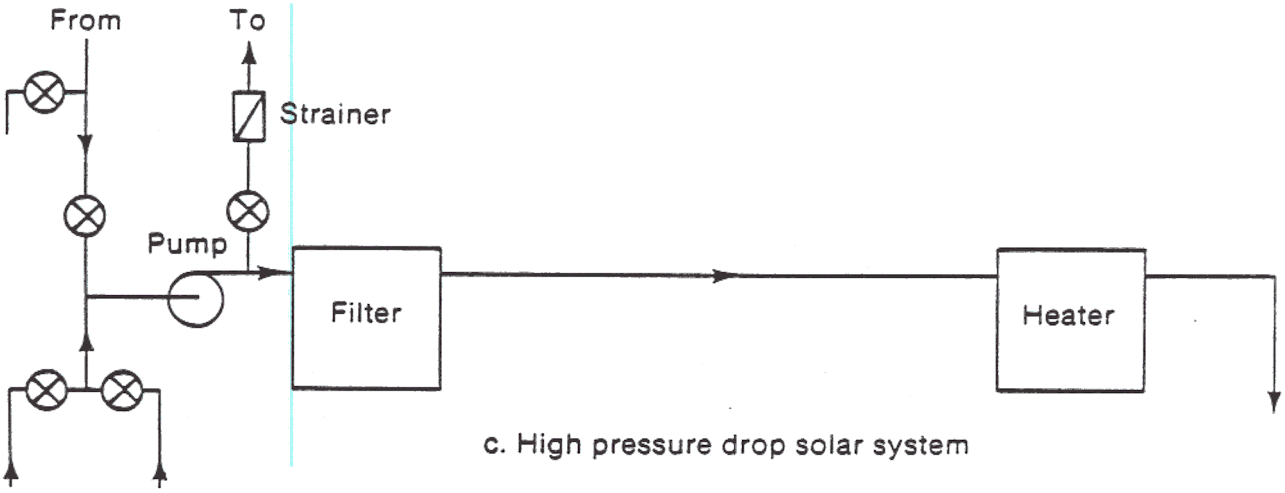

c. High pressure drop solar system

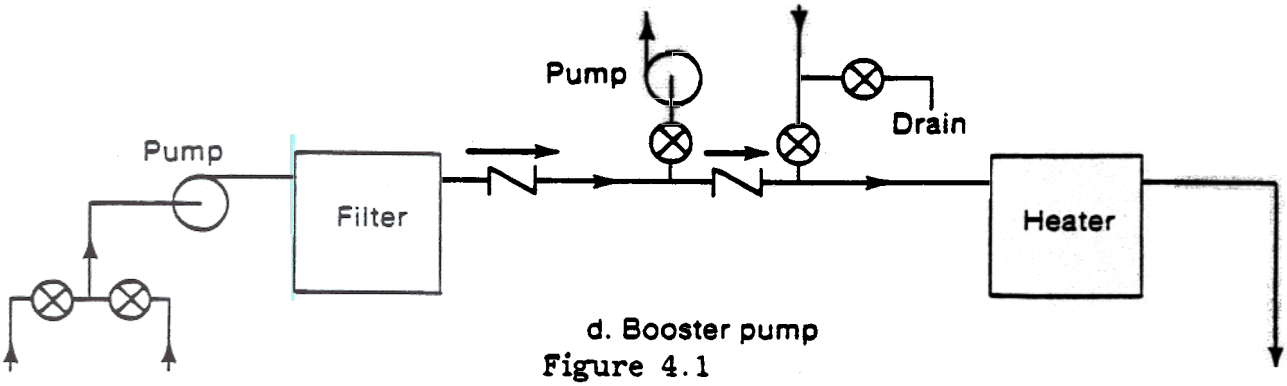

d. Booster pump

Figure 4.1

Pool Plumbing Schematics

automatic valve is placed in the main line between tee's that feed collector bank and return the solar heated water Gate valves may be placed in the feed and return lines for isolating the solar system from the pool filtration system when the filter is being backwashed or when adjustments are being made to the solar system. When solar heating is desired, the pump timer is adjusted to operate during daylight hours and the valve in the main line is closed somewhat to restrict or fully interrupt the flow and to force water up through the collectors. Valves on the lines to and from the solar system should be fully open.

Flow through the collectors may be increased by closing the valve in the main line. It may seem logical to reduce the flow rate through the solar array to make the return water warmer, and this can be done; however, it is <u>not</u> logical--the collectors will be forced to operate at higher temperatures, their efficiencies will drop (see Chapter 5) and less solar energy will be delivered to the pool. The temperature rise through the collectors should be kept low -- 10°F or less on warm sunny days -- unless the manufacturer's specifications call for a higher temperature differential.

Forcing water through the solar system uses some of the pump's power, thus reducing the flow rate through the pool filtration system. As the main line valve is closed, pressure on a gauge mounted on the filter or discharge side of the pump body will rise slightly. If valve is closed entirely, all of the flow is diverted through the solar array and the collection efficiency increases. If the pressure at the filter does not rise unduly, the solar system should be operated in this way. However, the more the pressure rises the slower the flow through the filtration system This will increase the length of time

required for the entire pool's contents to be filtered Thus it may be necessary to allow some of the flow to bypass the collectors. An inexpensive plastic flow meter can be used on the main line connection to monitor flow rates through the filtration system. Check with local building officials to determine minimum filtration flow rates or pool turnover times required in your area

4.1.2 Systems with High Pressure Drop Across the Collector Array

Those solar systems which produce large pressure drops can be installed with extra pumps or plumbed as shown in Figure 4.1c The feed line to the collectors is connected to the discharge side of the pump, ahead of the filter, and the return line is connected to the suction side of the pump. The full pressure differential produced by the pump is available to force circulation through the collectors.

When solar heating is desired, valves to the solar system are opened If the pressure at the filter gauge drops substantially, or a flow meter on the main filtration line indicates that the pump is being short-circuited by excessive flow through the collector loop, one of the valves can be closed slightly to force more water through the filtration system

Since water will pass through the collectors before it goes through the filter system, a strainer is recommended on the feed line to capture medium-size particles that can clog small fluid passageways in the collectors

BOOSTER PUMPS

When the existing pool pump lacks enough power to circulate sufficient flow through the solar system and the filtration system in either of the configurations shown, a booster pump may be required It should be installed as shown in Figure 4.1d Common pool-circulating pumps with or without the strainer basket are suitable for this application

The booster pump should be placed in the line feeding the solar collectors, not in the main circulation line. In this position it can be operated (consuming electricity) only when circulation through the solar collectors is wanted. Of course, the booster pump may be operated by the same time clock as that for the filter pump, but more often it will have a separate control. If both pumps operate from the same timer, it should be set so that the pumps come on during daylight hours If the booster pump is separately controlled, the filter pump may run for a longer portion of the day, and the booster pump should turn on during appropriate periods but only when the filter pump is operating

4.2.1 Controlling the Pump's Operation

Manual flow control or control with time clocks is simple and inexpensive but has drawbacks Since clocks do not sense weather conditions, the circulating pump may be running when there is insufficient solar energy available to warm the pool water. Collectors may lose energy rather than gain it if weather conditions are unfavorable Automatic flow controls overcome this difficulty. The most common plumbing schematic for systems using these devices is shown in Figure 4.2

Accurate differential temperature control is difficult to achieve because of the small temperature rise which takes place in solar pool heaters. A sensor, tapped into the piping at a convenient place ahead

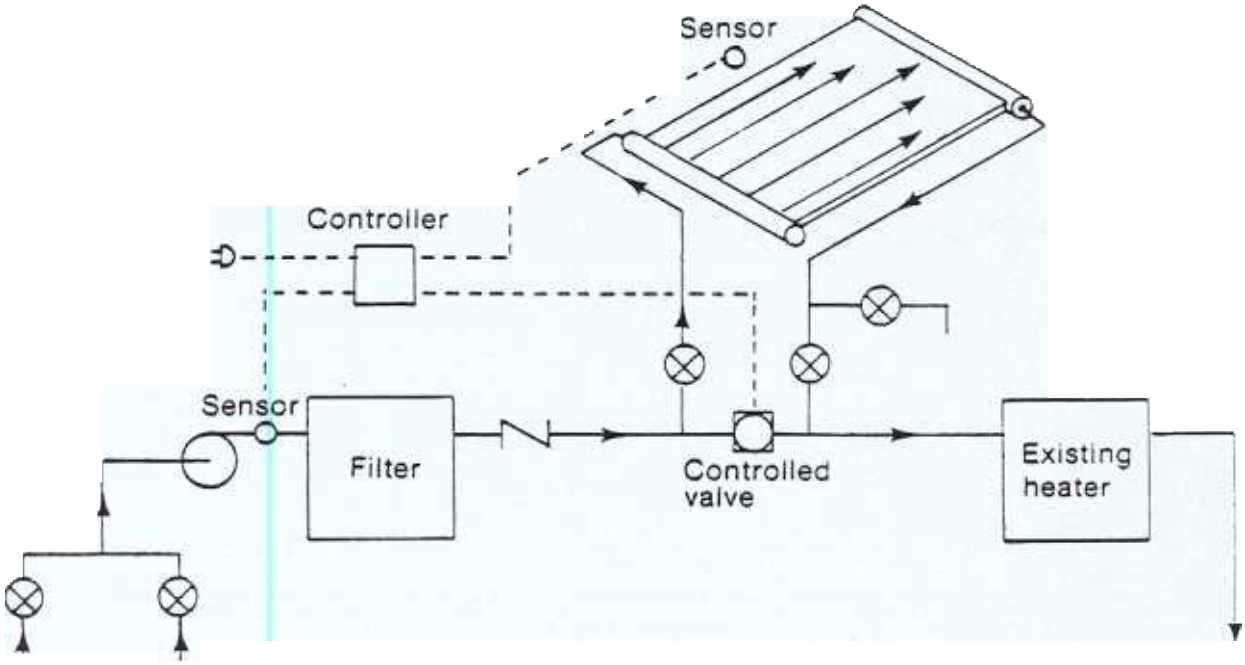

Figure 4.2

Automatic Control Schematic

of the collector return line, measures the pool water temperature Another sensor is housed in a plastic block and placed near the solar collectors (or it may be attached to the collector outlet) so that its temperature parallels that of water at the outlet of the collector When the pool water temperature exceeds the collector water temperature, the control valve remains in the open position and the flow bypasses the collector loop When the collector water temperature exceeds the pool water temperature, the valve is closed, forcing the flow through the

collectors When operating properly, a differential controller automatically adjusts to changing conditions, monitoring variations in collector temperature caused by clouds, other weather factors, and the approach of evening When collector temperature drops, the control de-energizes the valve and flow bypasses the collector. Maximum pool temperature limits can be programmed into some controls In practice it has proven equally effective to control the flow through the collectors with a single solar sensor, which turns on the solar pump and/or activates the diverting valve above a fixed solar intensity level

FLOW CONTROL VALVES

Control valves may be actuated hydraulically or electrically. One of the earliest valves used, and one that is still popular today, is a hydraulically operated pinch valve consisting of a cylinder with expand-

bladder inside A high-pressure line connected to the discharge side of the pump is used to expand the bladder, pinching off the flow and diverting it through the solar system. A low-pressure line connected to the suction side of the pump deflates the bladder and allows the flow to pass unimpeded. Switching between the high- and low-pressure lines is accomplished by an automatic controller

Electrically operated valves also are common. The control signal may be used to operate a small solenoid that, in turn, activates the main valve in much the same way the the pinch valve is activated Irrigation valves are sometimes used for this purpose, but pressure drops across these valves may be excessive Specifically designed and constructed valves for solar pool heating are available in most locations

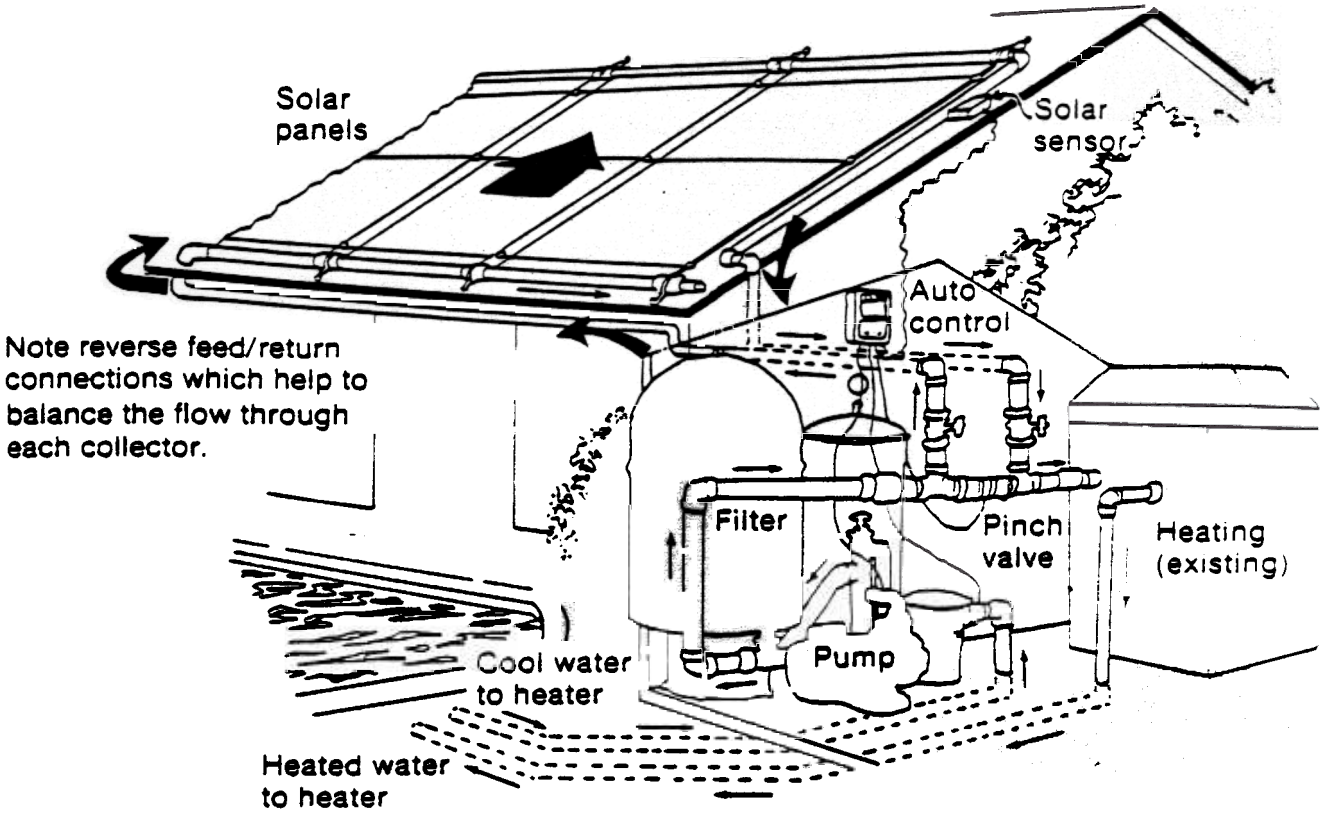

Figure 4.3

Solar Pool Heating Isometric

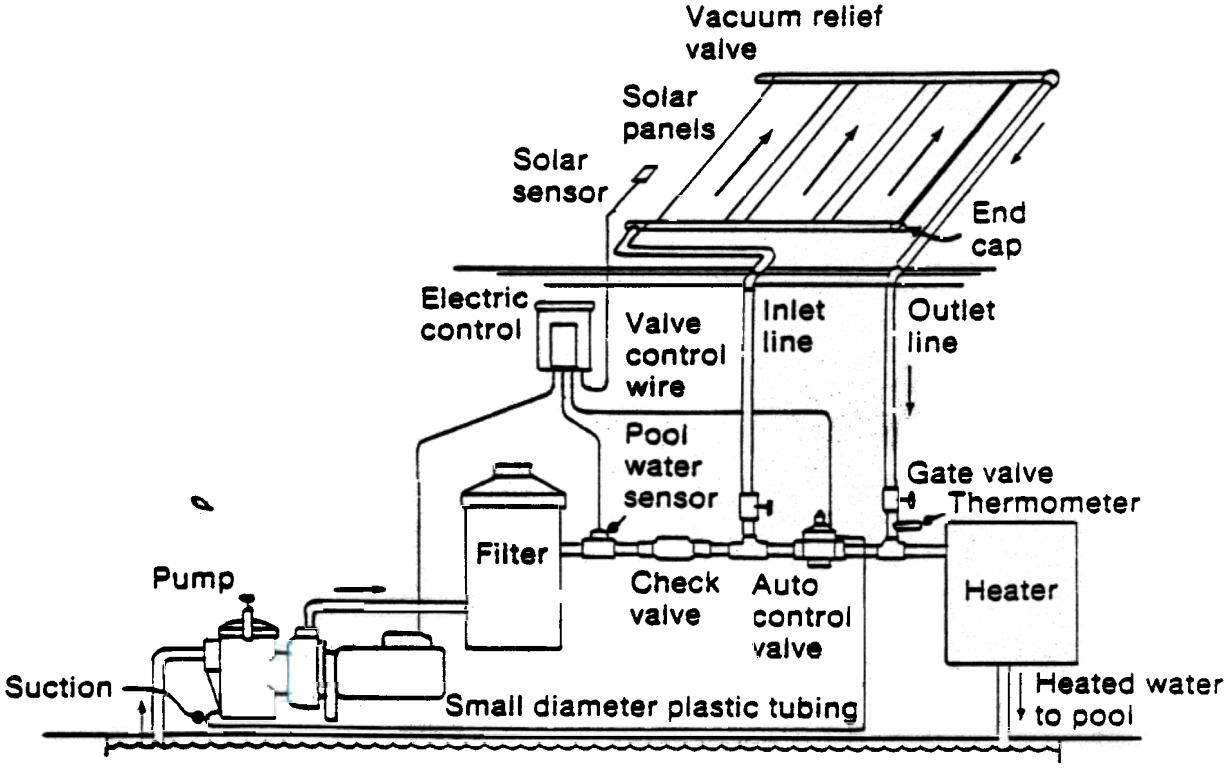

Figure 4.4

Solar Pool Heating Components

Automatic flow control schematics, taken from the installation diagrams of two low-temperature collector manufacturers are shown in Figures 4.3 and 4.4

4.4 MINIMIZING PRESSURE DROP THROUGH THE COLLECTORS

Figure 4.5 shows a method of minimizing the pressure drop across an array of black plastic piping installed to heat a swimming pool Figure 4.6 conveys the same information for plastic panels.

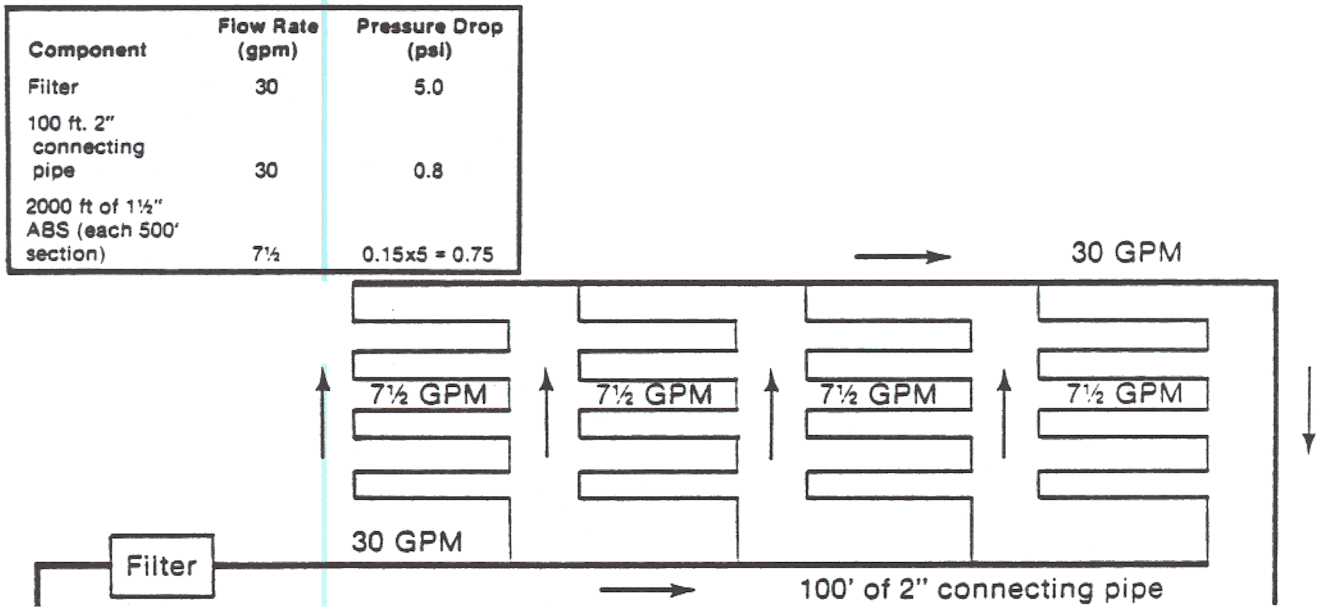

Figure 4.5

Pipe Manifold System

Component	Flow Rate (gpm)	Pressure Drop (psi)
Filter	30	5.0
100 ft. 2" schedule 40 plastic pipe	30	0.8
4 x 10 ft plastic panel (each panel)	6	0.5

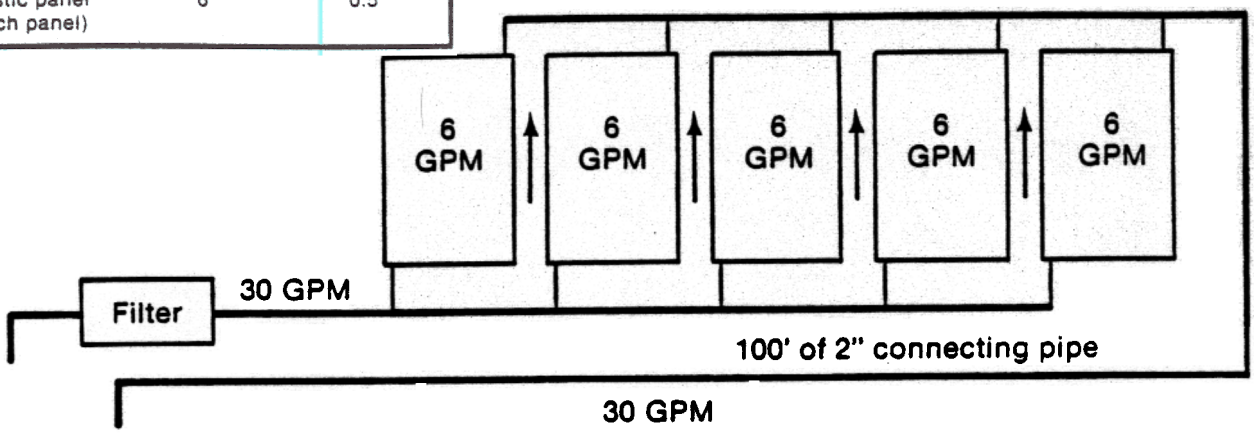

Figure 4.6

Solar Panels Manifolded to Minimize Pressure Drop

Figure 4.7 explores two methods of balancing the flow of water to an array of several collectors. If flow is unbalanced, those collectors receiving the lowest quantity of water will run "hot" and their efficiency will drop because of excessive heat losses to the surrounding air

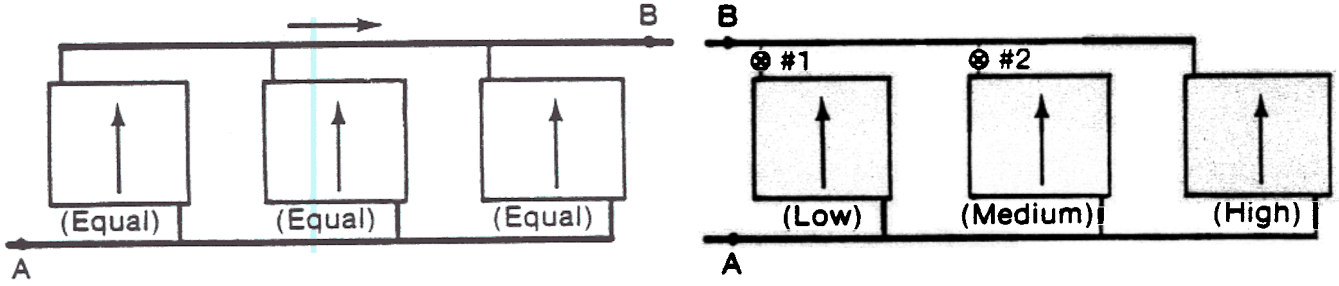

Paths from point A to point B offer equal resistance regardless of which collector the water flows through.

Paths from point A to point B offer low, medium, and high resistance to flow. Valve #1 must be partially closed, and valve #2 must be closed slightly less in order to balance flow through the system.

Pipe balanced and valve balanced systems

Figure 4.7

Flow Balancing Method

FREEZE PROTECTION

Because solar collectors lose heat to the night sky by radiation, they should be protected when the air temperature drops below 40°F

In Florida, solar swimming pool heaters are usually protected from freeze damage by one of two methods 1) draining the vulnerable portions of the collector system and its piping or 2) circulating pool water through the collector loop during freezing weather The first method is the more popular It requires that the collectors and piping be sloped to allow for drainage Check valves must be placed so that they will interfere with the draining process In the schematic pictured in Figure 4.1b this is accomplished by opening the center gate valve between the pipes to and from the collector array

A vacuum breaker should be installed in a self-draining system to admit air, which allows complete draining of the piping. It should not be placed at the top of the solar collector loop because at that location it may admit air during periods when the pool water is circulating (because of the negative static head in the return pipe from the roof to pool). It should be placed between the circulation pump and the solar collector array. The internal hydrolic pressure at the specific location should be above atmospheric pressure during circulation of the water FSEC Installation Note #13 gives more detailed instructions for calculating an appropriate location

Systems which employ circulation of pool water for freeze protection require no special hardware other than a freeze sensor circuit to activate the circulation pump. However, their protection is afforded at the expense of cooling the pool. Thus, they are most useful in the southern-most portions of the state where freezing weather is a very occasional phenomenon

CHAPTER 5

METHODS FOR SIZING FOR THE COLLECTOR ARRAY

INTRODUCTION

An understanding of solar collector characteristics, performance testing methods and ratings will assist system designers to make the most effective use possible of solar hardware

In Florida solar collectors used for swimming pool heating often are large, unglazed, uninsulated areas of relatively inexpensive black materials contain passages through which pool water may be forced When these areas are exposed to sunshine, they become warmer than the pool water A circulation pump forces the pool water through the collector passages where it is warmed a few degrees The heat collection areas often are made of durable plastic materials that incorporate inhibitors which make them resistant to ultraviolet attack. Sometimes the plastic is in panel form, sometimes in pipe form Metal decks with tubular passages also are used to collect the sun's energy, as are black patio squares with fluid passages Because of their low cost, these types of solar pool heating collectors by far outnumber arrays of more expensive, glazed, conventionally boxed and insulated flat-plate collectors But they, too, are used for swimming pool and spa heating As the sizing calculations in this chapter bring out, glazed, insulated collectors exhibit better thermal performance during cold windy weather.

FACTORS AFFECTING SOLAR POOL HEATER PERFORMANCE

5.1.1 Cold Weather

The cold-weather performance of unglazed solar collectors operating

under windy conditions has fallen short of what would have been expected from their performance equations or FSEC low-temperature ratings is not surprising; those ratings are based on the daytime average round Florida temperature rather than on the daytime average winter temperature when pool heaters are most often used

5.1.2 Temperature and Insolation Corrections

Correction factors which may be used to modify reported measures of thermal performance of glazed collectors to accurately reflect their performance under winter temperature and insolation conditions in Florida are contained in Figures A.1 through A.6, Appendix A. Correction factors for unglazed collectors are shown in Figures A.8 through A.13 These cover the range of temperatures and insolation rates indicated in Table 5.1, which also shows the conditions for which the modification factors may be used.

Table 5.1
Matrix of Temperature/Insolation Conditions
for which Corrective Factors are
Derived in Chapter 5

$t_{inlet} = 95$

Average Air Temp. (°F)	$t_{inlet} - t_{air}$ (°F)	Insolation rate (Btu/ft² day)					
		1000	1200	1400	1600	1800	2000
40	55	x	x	x	x	x	x
50	45	x	x	x	x	x	x
60	35	x	x	x	x	x	x
70	25	x	x	x	x	x	x
81	14	x	x	x	x	x	x
90	5	x	x	x	x	x	x

The methodology used to develop Figures A.1 through A.13 is described in the Appendix A

5.1.3 Wind Speed

Equally important to collector performance evaluation is the fact that the ASHRAE test procedure used to develop thermal performance equations and ratings for unglazed collectors is carried out at wind speeds of less than three mph over the collector surface. Unglazed collector performance suffers badly when the collector is exposed to cold winds but the reported low-temperature ratings give no hint of that fact.

(A third factor reducing the solar contribution of an array of either glazed or unglazed collectors is the loss inherent to system functioning. That system loss is made up of heat losses in connecting piping, losses in absorbed radiation resulting from the sun's motion both daily and seasonally, other than optimum controller set points, and other factors discussed in Section 5.7.)

5.1.4 Wind Speed Corrections

Glazed-collector performance ratings that have been corrected for temperature and insolation require no additional modification for normally encountered wind speeds.

However, in the case of unglazed collectors those ratings must be further modified to reflect their response to winds speeds of 5 mph or more. Figure 3 is a nomograph which may be used to make such modifications. The methodology used to develop that nomograph is presented in Appendix B.

5.1.5 Methods for Estimating Wind Speed at Specific Locations

Graphs, tables and formulas that may be used to convert published wind speed data to that which may be expected on top of or adjacent to specific buildings is given in Appendix C.

5.2 SOLAR COLLECTOR TESTING PROCEDURES

An understanding of collector testing and rating procedures enable solar pool heater designers and installers to better understand the reasons for the wind speed corrections They will be reviewed before corrective measures are presented

5.2.1 Glazed Collectors

At present the ASHRAE 93-77 performance test for glazed solar collectors may be conducted at any wind speed below 10 mph Wind speeds occurring in field installations over the collector surface are close enough to that figure so that test-generated performance graphs predict actual collector output with reasonable accuracy. Additionally, the low temperature performance of even those collectors with only a single cover is seriously impaired by moderate increases in wind speed

5.2.2 Unglazed Collectors

The generally accepted procedure (in America) for testing unglazed, low temperature collectors -- ASHRAE 96-80 -- requires that the test be conducted at wind speeds below 3 mph In this case, serious problems arise when efforts are made to correlate test results with actual field performance of unglazed collectors under cool, windy conditions Cool winds blowing over an unglazed collector surface substantially increase the convective losses which occur from that surface during periods when pool heating is desired The test results do not reflect this fact

5.2.3 Collector Performance Graphs

Both ASHRAE test procedures result in the generation of performance graphs such as Figure 5.1 Performance of typical pool heating collectors is shown in that figure Efficiency, defined as the amount of energy collected divided by the total amount of solar energy striking the collector surface, is displayed on the vertical axis of Figure 5.1. (One of the goals in selecting solar collectors is to obtain the highest efficiency at the least cost.) The horizontal axis shows the fluid parameter, which includes three variables Collector inlet temperature (t_i), air temperature (t_a), and hourly quantity of solar radiation striking each square foot of area (I). If we plot the fluid parameter, $\frac{t_i - t_a}{I}$

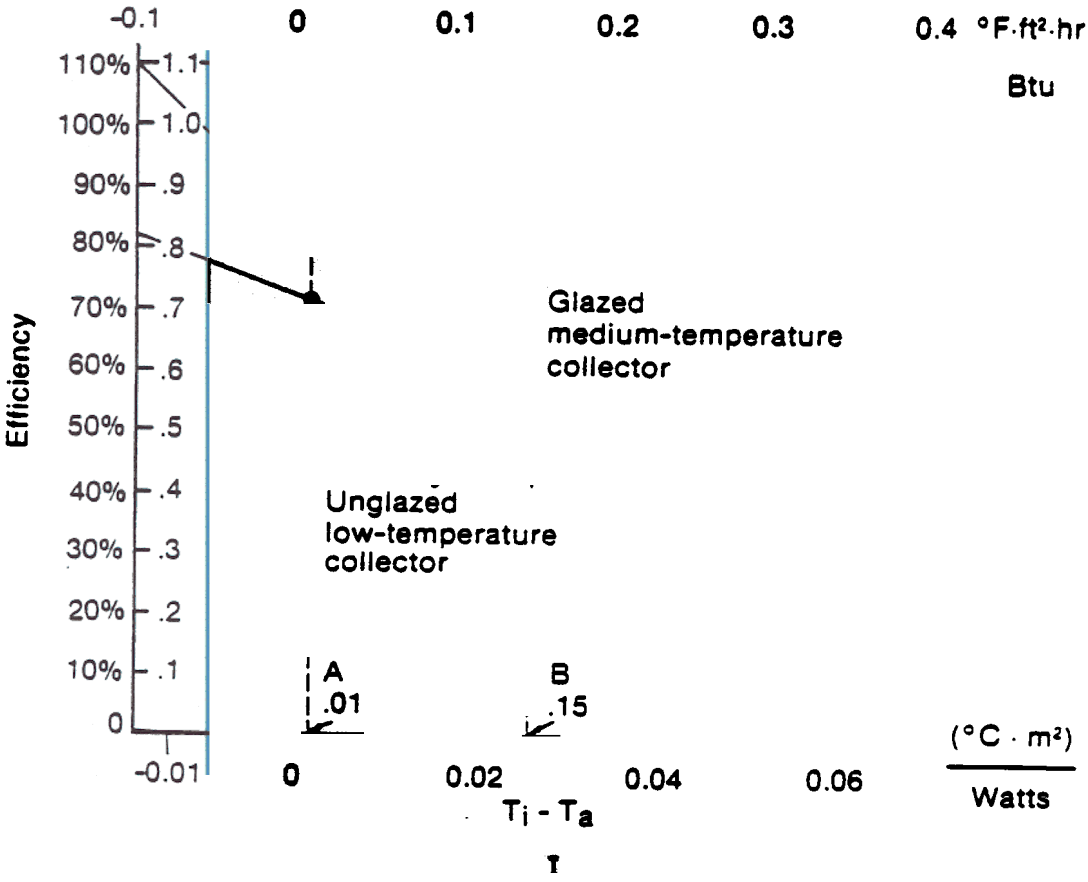

Figure 5.1

Collector Efficiency

on the horizontal axis and the collector efficiency on the vertical axis, the graphs turn out to be smooth curves which are nearly straight lines

Efficiency decreases as the fluid parameter increases for both types of collectors. Factors that reduce collector efficiency are: decreases in air temperature decreases in solar radiation and increases in pool tempera- (which is equal to the collector inlet temperature) When using graphs like those in Figure 5.1, care must be exercised because the horizontal axis is sometimes labeled in metric units, sometimes in English engineering units. Both are shown in Figure 5.1

The following two examples are marked in Figure 5.1:

	Case A	Case B
Pool Temperature	78°F	80°F
Air Temperature	75°F	65°F
Solar Radiation	300 Btu/ft^2-hr (sunny)	100 Btu/ft^2-hr (cloudy)
Fluid Parameter	$\frac{78\text{-}75°F}{300\ Btu/ft^2\text{-}hr} = 0.01$	$\frac{80\text{-}65°F}{100\ Btu/ft^2\text{-}hr} = 0.15$
Low Temp. Collector Efficiency	83%	48%
Medium Temp. Collector Efficiency	70%	60%

Case A represents conditions on a relatively warm, sunny day In situation, a typical low-temperature collector is more efficient than a typical medium-temperature collector and will capture more energy per square foot. During a cool, cloudy period such as that represented by Case B, the situation is reversed and the medium-temperature collector is the more efficient. (During windy, cold weather, the glazed collector is affected only slightly but the unglazed collector may actually cool any pool water flowing through it.)

In pool heating applications, air temperature sometimes exceeds pool water temperature, and energy can be captured directly from the air as well as the sun's rays. For these situations the fluid parameter is

negative, and efficiencies greater than 100 percent may result. Figure 5.1 been exaggerated to show this. The steep slope of unglazed collector curve indicates that it gains efficiency rapidly as its negative fluid parameter increase Conversely, it loses efficiency rapidly as its positive fluid parameter increases.

5.2.4 Weather Conditions During the Pool Heating Season

An examination of the temperature and insolation data for the Florida cities displayed in Appendix E reveals that often, during winter months either or both do not conform to the Florida standard daily totals in Table Because collector output is dependent upon the fluid parameter which includes both the air temperature and insolation rate, some method of modifying a collector's low-temperature rating to bring it into correspondence with non standard temperatures and insolation rates is called for if an accurate estimate of their cold weather performance is required As previously indicated table 5.1 shows a matrix of temperatures and insolation rates for which correction factors have been developed. Those correction factors are presented in the form of nomographs for both glazed and unglazed collectors in Appendix A and the methodology by which they were developed is summarized in that appendix.

Table 5.2
Insolation and Ambient Temperature
for Standard Florida Day

I Watts/m^2	Fraction of Daily Insolation	Total I Btu/ft^2hr	t_a Temp, °C	Fraction of Mean Daytime Temperature	t_a Temp, °F
50	.01	16	24	.93	75
151	.03	48	25	.95	77
252	.05	80	25	.95	77
353	.07	112	26	.98	79
454	.09	144	27	1.00	81
555	.11	176	27	1.00	81
656	.13	208	28	1.01	82
757	.15	240	29	1.04	84
858	.17	272	29	1.04	84
959	.19	304	30	1.06	86
5,045 W·hr/m^2		1,600 Btu/ft^2	27 (AVG)		81 (AVG)

5.2.5 Weather Data for Use with Figures A.1 to A.13

Appendix contains weather data that includes average temperatures insolation rates for each month. Add 5°F to the average monthly temperature to bring it into correspondence with the average temperature during collecto operation (four hours before to four hours after solar noon). The sample problem in Appendix D demonstrates the use of the nomographs contained in Appendix A for the rerating of both glazed and unglazed collectors to bring their predicted low-temperature performance into accord with weather conditions for winter months in Daytona Beach

CORRECTION FACTORS FOR WIND SPEED

Wind Speed Correction Not Required for Glazed Collectors

After low-temperature performance ratings for glazed collectors have been adjusted for winter temperature and insolation conditions, they do not require further correction for the wind speeds normally encountered at Florida locations. The reasons for this have been stated in Section 5.1.4

Win Sp Co :to U; glaze C ll(to

Lo :rf(rman tin laz)ll(:to;

f(win tem tu: lation ditio

pe ds mp T ts

corr ti f: whic ap lie to th 'ir: :rf(

glazed fla late)ll(tor Figure .ts th(

in: rmation in Th odifie eq tion ay to

te th erf ch collectors de

tio

A: vio ly di th relatio hip :tw( )ll(

p:rf(dre Se tion

T: bl

'ir(:rf(rmance tio Win Correctio :to:

(U glazed Coll tors

FPM	MPH	First Term Multiplier	Second Term Multiplier
440	24		
88	4 48		
1320	72		61
			04

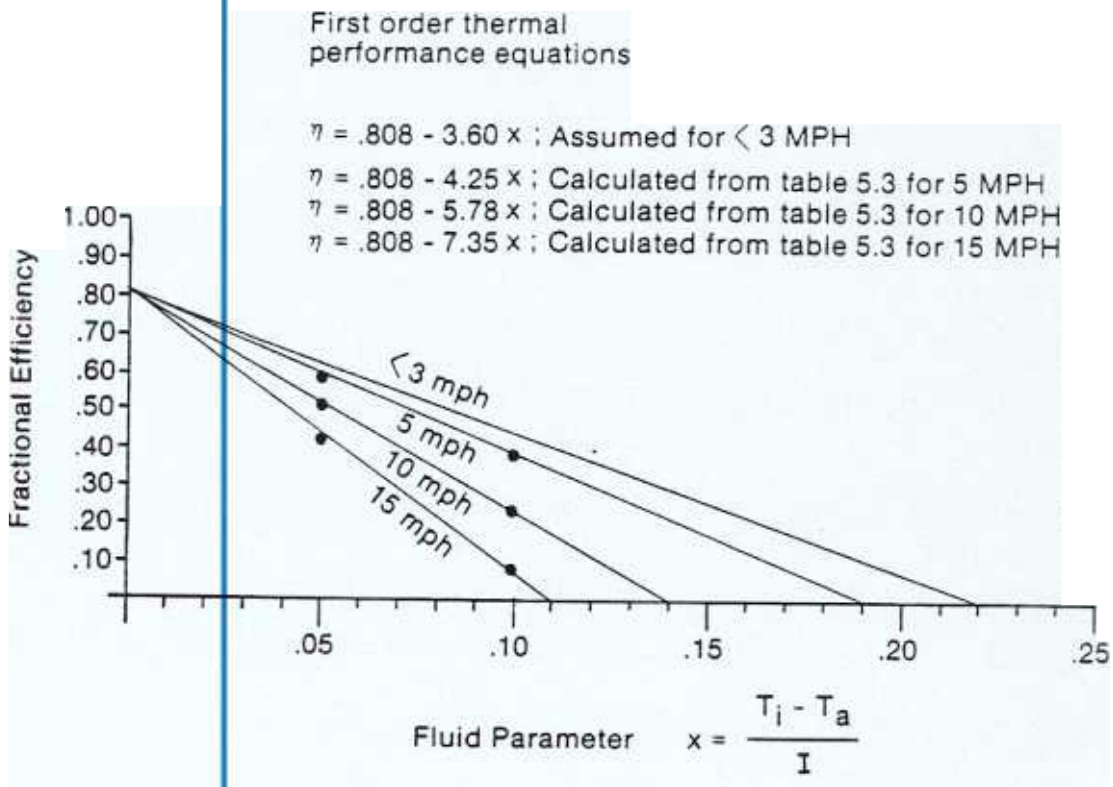

Figure 5.2

Modified Performance Graphs and Equations

(for unglazed collectors)

The equations appearing in Figure 5.2 have been used to generate a nomograph which is presented in Figure 5.3. It may be used to correct low temperature ratings for unglazed collectors for the effect of wind speed. The appropriate rating may be entered on the left vertical axis and the rating as corrected for windspeed read from the horizontal axis. If temperature and insolation corrections are required, they should be made first (using Figures A.1 to A.6). The low temperature rating as corrected from Figures A.1 to A.6 may then be entered on the left vertical axis of Figure 5.3 and corrected for the effect of wind speed

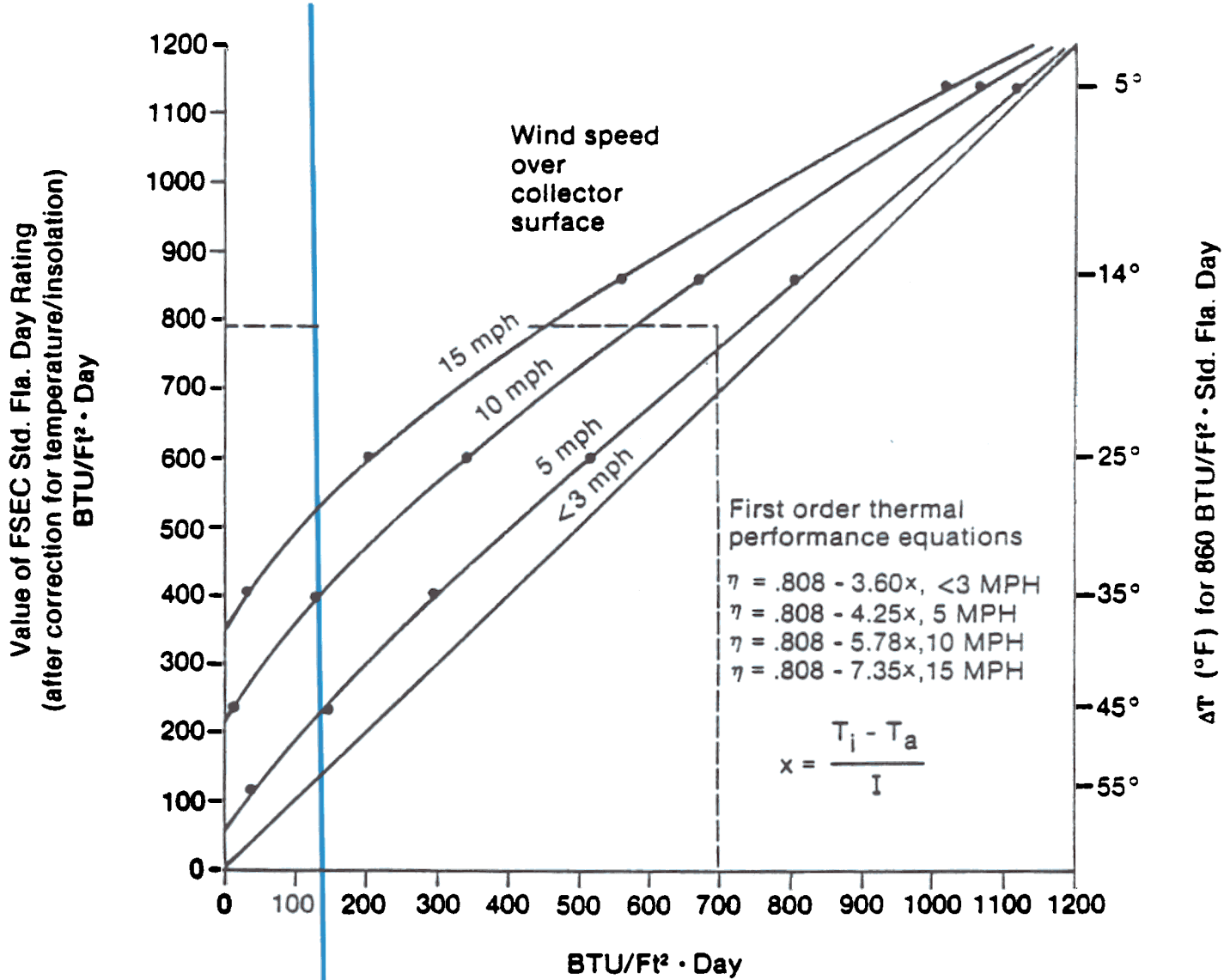

Figure 5.3

Wind Speed Correction Factors for Unglazed Collectors

5.3.2.1 Calculator Programs

If a programmable calculator with adequate memory and functional capacity is available the reader may program it to reevaluate the FSEC standard day rating of any collector for specific conditions of insolation pool and ambient temperatures and wind speed simultaneously. This is a far more accurate method of predicting collector output than the nomograph method if operating conditions differ substantially from 1600 Btu/ft^2·day and $t_i - t_a$ 14°F It is also far more accurate when the first order

thermal performance equations differ from $.808 - 3.60 \frac{t_i - t_a}{I}$ (unglazed) and $.67 - 1.03 \frac{t_i - t_a}{I}$ (glazed)

Programs for several popular Hewlett/Packard and Texas Instruments calculators are contained in Appendix F.

Figure 5.3 is based on an "average" unglazed performance ($\eta = .808 - 3.60 \frac{(t_i - t_a)}{I}$; EE units) equation. The reader may wish to apply the factors in Table 5.3 to the performance equation of a particular collector in order to develop a wind speed correction nomograph for that collector It is a simple procedure which may be readily accomplished by entering ΔTs of 5, 14, 25, 35, 45 and 55°F and an insolation rate of 1600 Btu/ft²·day in any of the calculator programs contained in Appendix F.

5.3.2.2 Alternative Use of Figure 5.3

The wind speed reference curves in Figure 5.3 may be accessed in a simple, abreviated way The right-hand vertical scale represents the daily average of the difference between the collector inlet temperature and the ambient air temperature (t_i-t_a) during the solar collection period. All temperatures are in °F. The points on the wind speed reference curve were generated by applying the ten standard Florida day calculation increments Table 5.2) modified to represent ΔT values of 5, 14, 25, 35, 45 and 55°F and the first order thermal performance equations identified on Figure 5.3 If the collector under consideration has a low-temperature rating within ± approximately 100 Btu/ft²·day of 860 Btu/ft²·day, Figure 5.3 may

be used to correct for ΔT's other than 14°F (standard Florida day) and/or wind speeds higher than 3 mph The process is rendered less accurate as insolation rates depart from 1600 Btu/ft²·day (in the plane of the lector) and as the slope and intercept terms of the first order thermal performance equation for the collector under study deviate from the composite equation:

$$\eta = .808 - 3.60 \frac{(t_i - t_a)}{I}.$$

To use Figure 5.3 in this alternative way:

1) Enter the right vertical axis at the desired $(t_i - t_a)$ value
2) Move horizontally to the appropriate wind speed curve
3) Move vertically down to the horizontal scale.
4) Read the corresponding corrected rating for the "average" collector (standard Florida day uncorrected low temperature rating 860 Btu/ft²·day).
5) Use the following formula to make the ΔT/wind speed correction for the collector in question

$$\text{Btu/ft}^2\cdot\text{day}_{\text{corrected}} = \frac{\text{Btu/ft}^2\cdot\text{day}_{\text{uncorrected}}}{860} \times \text{Rating}_{\text{from horizontal scale}}$$

It should be noted that the wind speed correction factors have or no effect on the calculated performance at low positive values of the fluid parameter - that is, at high insolation rates and air temperatures near that of the pool or spa. In fact, the higher wind speeds improve heat gain from ambient air if the average collector temperature is lower than the ambient air temperature (a condition represented, as previously indicated, by a negative fluid parameter)

5.3.3 Wind Speed and Direction

An accurate estimate of the wind speed over the collector surface is required if the results of the wind speed correction process are to be reliable. In Florida most cool winds come from the north; fortunately, collectors face south and the wind speed over their surfaces is reduced by the presence of buildings and collector support structures Thus, the wind speeds over the collector surface are sometimes less than one half of those reported by the local weather bureau. (Several graphs and tables useful for estimating wind speed over the collector surface are presented in Appendix C A range of performance curves, equations or nomographs corresponding to wind speeds of 3-15 mph over the collector surface should be adequate for the evaluation of unglazed collector performance under cool, windy conditions. It should be noted that although increased wind speeds cause increased convective collector losses only if those winds are cooler than the collector surface, this is not true of the surface of a swimming pool or spa which will suffer increased evaporation losses with increased winds of almost any temperature It must also be remembered that daytime wind speeds are usually higher than nighttime wind speeds and daily averages may require adjustment to account for this increase Instructions for making this correction are contained in Appendix C

5.4 USES FOR THE INFORMATION

The performance ratings derived by employing the above correction factors and nomographs allow designers or installers of solar commercial pool heaters to more accurately evaluate the solar contributions which may be expected from specific collectors under either specified or average monthly conditions of insolation, air temperature and/or wind speed This

information will help the designer or installation contractor to offer a pool owner supportable advice as to whether to install:

1 Unglazed collectors with the expectation of using a fossil-fueled backup heater during either overcast or cold, windy weather

2 Unglazed collectors and a wind screen which will reduce but not eliminate dependence on the backup heater.

3 A more costly array of glazed collectors which will substantially reduce the dependence on the fossil-fueled heater during cold weather but will function less well than will unglazed collectors during warm weather because of higher reflection losses.

EFFECT OF BACK INSULATION ON COLLECTOR OUTPUT

The rear side of unglazed, uninsulated solar collectors will suffer additional thermal losses not accounted for in their performance ratings unless they are mounted on insulated surfaces. During testing in accordance with ASHRAE 96-80, collectors are mounted firmly against a support structure with an insulating value of approximately R-5

If a field installation is made on a support structure with a lower R value, the collectors' performance will suffer correspondingly during cool weather Airflow between the back of an uninsulated collector and its mounting substrate seriously reduces collector efficiency during cool weather

THE SPECIAL CASE OF "PIPE" COLLECTORS

It is the author's opinion that if the low temperature rating of plastic pipes used for swimming pool heating based on the projected area of the array are used to enter Figures A.1 through A.6, those nomographs may

be used to rate the pipe array's performance in the range of temperatures and insolation rates given He knows of no substantial body of data which may be used to evaluate the effect of increased wind speed on pipe collector performance Because their sides and even backs are exposed to the wind, the effect would be expected to exceed that suffered by unglazed flat plate collectors with virtually no side exposure and, when mounted against a roof, with little or no rear exposure. Because of the absence of objectively generated emperical data and uncertainties encountered in the mathematical analysis of the effect of wind speed on convective losses from arrays of pipes, no wind speed correction factors are suggested for systems. This in no way is meant to reflect discredit on arrays of pipe used for solar swimming pool heating

SYSTEM CORRECTION FACTORS

There are several reasons why even properly operating solar pool heating systems do not deliver as much energy to the pool as would be predicted from the thermal output of their individual collectors. First, no control strategy is responsive enough to the availability of thermal energy to avoid some losses resulting from pump cycling Second, large pool heating collector arrays usually are installed in a fixed position and receive energy during much of the day at angles of incidence of more than 30° allowed during testing This reduces their thermal output below indicated by their performance rating, the calculation of which does not include the penalty resulting from the use of an incident angle modi-

Third, during cold weather the circulation piping, which is seldom insulated, loses some energy to the surrounding ambient air (This latter loss is far less significant than the first two.) Table 5.4 suggests system

correction (penalty) factors by which the predicted thermal output of the collector array may be multiplied to yield a more realistic evaluation of the deliverable energy from a solar pool heating system

Table 5.4
System Correction Factors for Florida

System Type	Collector Slope 30-40°	10-20°	0°	*
Open circulation loop	.95	.90	.85	95
Closed circulation loop (Hx effectiveness > .5)	85	.80	.75	.85

*Use this column if the FSEC low temperature rating has been modified for variations in insolation in the plane of the collector (regardless of slope angle).

To determine the system output, use the information in Table 5.4 and the following formula (Btu from collectors) x (system correction factor (deliverable Btu)

5.8 DETERMINING AND MINIMIZING WIND SPEED OVER COLLECTOR SURFACES

It is essential to accurately estimate and where possible to reduce wind speed over the surface of unglazed collectors and swimming pool or spa surfaces. This maximizes the return on the substantial investment required to install solar pool and spa heaters (or reduces fuel consumption by conventionally-fired pool heaters) Methods for estimating wind speeds at specific locations on or around several common building shapes are found in Appendix C. Appendix D applies the information from Appendix C to minimize the wind speed effect The sample problem in that appendix illustrates the use of the formulas and graphic design aids

CHAPTER 6

SIZING PUMPS, PIPES AND FILTERS

6.0 INTRODUCTION

If solar heat collectors are to be successfully used to meet a portion of the heating load for a commercial swimming pool (or a spa) their use should not reduce the rate of flow through the filtration system nor should it greatly increase the horsepower required to maintain that circulation. All code jurisdictions have maximum allowable turnover times for filtration and chlorination systems in pools. That time must not be exceeded because of the increased resistance to flow caused by the addition of piping and collector array. Excessive pumping horsepower unnecessarily reduces solar savings; this, too, is to be avoided. For simple installations, sizing the filters, pumps and pipe runs to adequately circulate, clean and heat the pool water successfully may be accomplished by following the instructions contained in the following sections. For large or complex installations, more-detailed manuals or a hydraulics specialist should be consulted.

A basic knowledge of the characteristics of a swimming pool's circulation system will be useful to solar designers and installers in selecting the components appropriate for the solar heating of a specific pool. It requires large enough pipe diameters to keep friction losses low, proper flow through the solar collectors to maximize heat collection yet minimize pressure drop, and adequate collector sizing to minimize the number of hours the pump must operate each day. Obviously, it is pointless to oversize the solar-related components to an extent that reduces the time required for heat collection below that required for acceptable filtration. (On most commerical pools the pump must run continously to meet community health

standards.) It may be beneficial for the designer to obtain a pamphlet entitled Energy Efficient Sizing of Swimming Pool Pumps,Motors and Filters, (EAP-PF1) from the National Spa and Pool Institute, 2000 K Street, NW, Washington, DC 20006.

6.1 SIZING FILTRATION AND CIRCULATION SYSTEMS

Proper sizing of swimming pool filters, circulation pumps, and pipe runs may be accomplished by using the information provided in this section in conjunction with data routinely provided by manufacturers of those components.

6.1.1 Filter Sizing Graphs

Filter sizing is accomplished by using graphs such as Figure 6.1 provided by filter manufacturers. The following kinds of filters are those most often used to keep swimming pools cleans.

Sand, gravel, or anthracite filters are sometimes operated at a flow rate as high as 20 gallons per minute (gpm)/ft^2. It should be noted that some code jurisdictions limit the flow rate through these filters to three gpm/ft^2. Diatomaceous earth (DE) filters usually operate well at about two gpm/ft^2. Both sand and DE filters may be cleaned by back washing and discharging the dirty water into a sewer or other appropriate outlet. An air gap in the discharge line often is required to ensure against backflow contamination from the sewer. Cartridge filters usually are operated at a flow rate of about one gpm/ft^2 and may be reverse flushed and re-used. When the cartridges become excessively dirty they simply are replaced.

In pool filtration systems, the need for cleaning is indicated by high readings on a pressure gauge that is located between the filter and the

Filter manufacturers specify the readings at which they recommend maintenance The typical pressure drop using properly sized, clean filters is about five psi The back washing valve assembly on DE and sand filters may add another five psi.

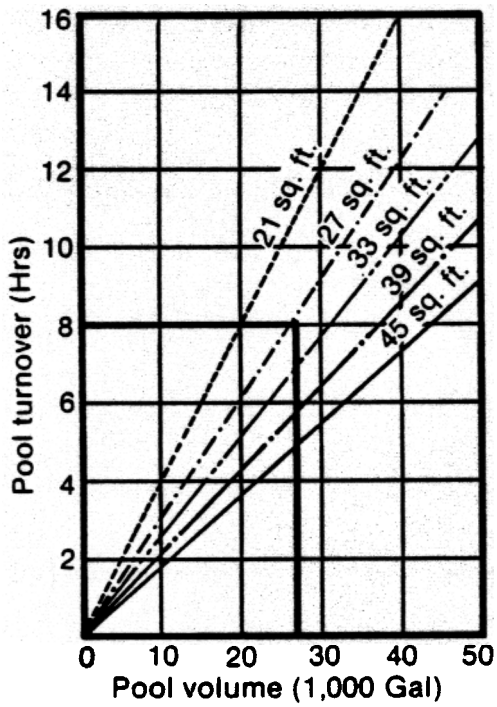

Figure 6.1

DE Filter Sizing Graph for Flow Rate of 2 Gpm/ft^2

6.1.2 Pump Sizing Graphs

To size the pumps it is necessary to establish a flow rate in gpm and then add up all the pressure drops which occur when water flows through the system at that rate. Figure 6.2 is a graph on which pressure drop flow rate are plotted for typical swimming pool ciruclation pumps

6.1.3 Sizing Connecting Piping

Connecting piping may be sized using pipe flow charts (Figures 6-4 and 6-5) Piping should be large enough to prevent excessively high flow rates which cause erosion of interior pipe and fitting surfaces Some code jurisdictions limit the rate of water flow through copper pipes to five feet per second Adequately sized piping and pumps help reduce maintenance and operating costs

6.2 SIZING A COMPLETE CIRCULATION SYSTEM

The following examples are intended to help clarify sizing procedures

The owner of a 20 foot x 40 foot motel swimming pool with an average depth of 4½ feet wants to be able to circulate the total pool volume through the filtration system in eight hours. (His turnover rate is one complete recirculation per eight hours.) He plans to use a DE filter and wants to know what size filter will be required and what size pumps will be required (1) with no heater, (2) with a gas heater, (3) with a solar heater and a gas heater for backup, and (4) with a solar heater without a backup The pump will be located so that the center of its impeller is three feet above the surface of the pool One hundred feet of pipe will be required unless solar collectors are used In that case, 200 feet of connecting pipe will be required. The high point of the solar collector array will be 12 feet above the center of the pump impeller The solar collectors will be connected to the circulation piping as shown in Figure 4.1b The owner also wants to know what size connecting pipe should be installed under any of the four alternative conditions

STEP 1. Determine the pool volume

Pool volume (gal) = 20' x 40' x 4.5' x 7.48 gal/ft^3 = 26,900 gal

STEP 2. Determine the DE filter cross sectional area if 2 gpm/ft^2 of filter is an acceptable flow rate through it, and the pool volume of 26,900 gallons must turn over every eight hours.

Figure 6.1 shows that a cross-sectional area between 27/ft^2 and 33/ft^2 be required. The filter that provides 33/ft^2 of cross-sectional area be the better choice because it will allow a turnover time of slightly less than eight hours

STEP 3 Determine the flow rate through the filtration system.

Because the entire volume must turn over once each eight hours,

$$\text{Flow rate} = \frac{26,900}{8} = 3360 \text{ gallons per hour (gph)}$$

$$\text{Flow rate} = \frac{3,360}{60} = 56 \text{ gpm}$$

STEP 4. If no heater is included in the system, determine the total pressure that the pump will be required to overcome at a flow rate of 56 gpm

Cause of Pressure Drop	Source of Information	Pressure Drop Lbs/In^2 (psi)	Pressure Drop Ft of Water (psi x 2.31)
100 ft 1½" schedule 40 plastic pipe	Figure 6.4	8	18.5
Fitting	About 1/2 of pipe drop	4	9.2
Valves	Manufacturer's specs.	5	11.6
Filter	Manufacturer's specs.	5	11.6
Lift head			3.
	TOTAL		54

Figure 6.2 shows that a one-hp pump (of the specific design covered by that graph) will circulate 56 gpm against a 57-foot head A 3/4-hp pump will circulate only 45 gpm against a 51-foot head, so the one-hp pump will be the safest choice

Discussion: It is interesting to note that if two-inch schedule 40 pipe is used, the pressure drop in the pipe is only three psi or seven feet of water, so the total pressure drop is about 37 feet of water Figure 6.2 shows that a 3/4-hp pump is powerful enough to circulate 52 gpm against a total head of 37 feet of water. (Turnover time increases to 8.6 hours.) Figure 6.3 illustrates the relative magnitude of the pressure drops

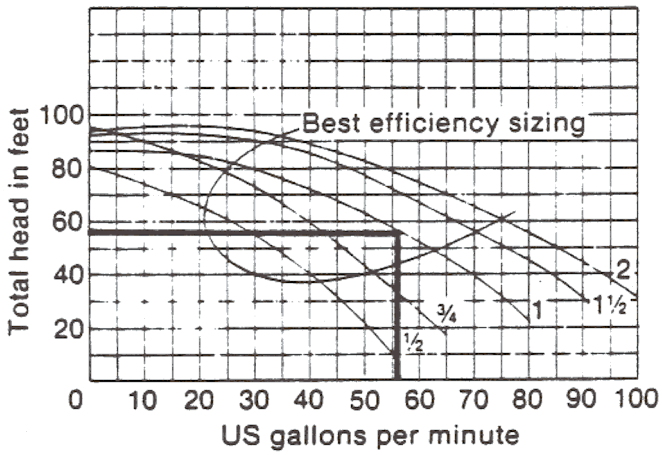

Figure 6.2 Pump Performance Curves

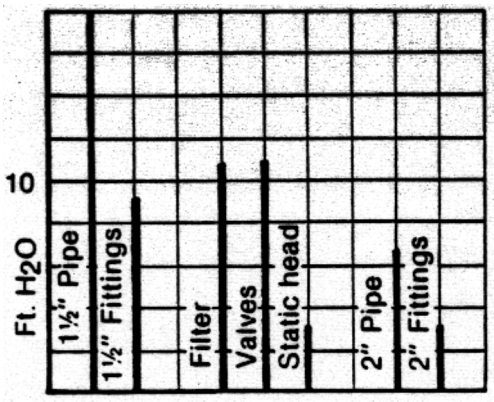

Figure 6.3 Magnitude of Pressure Drops

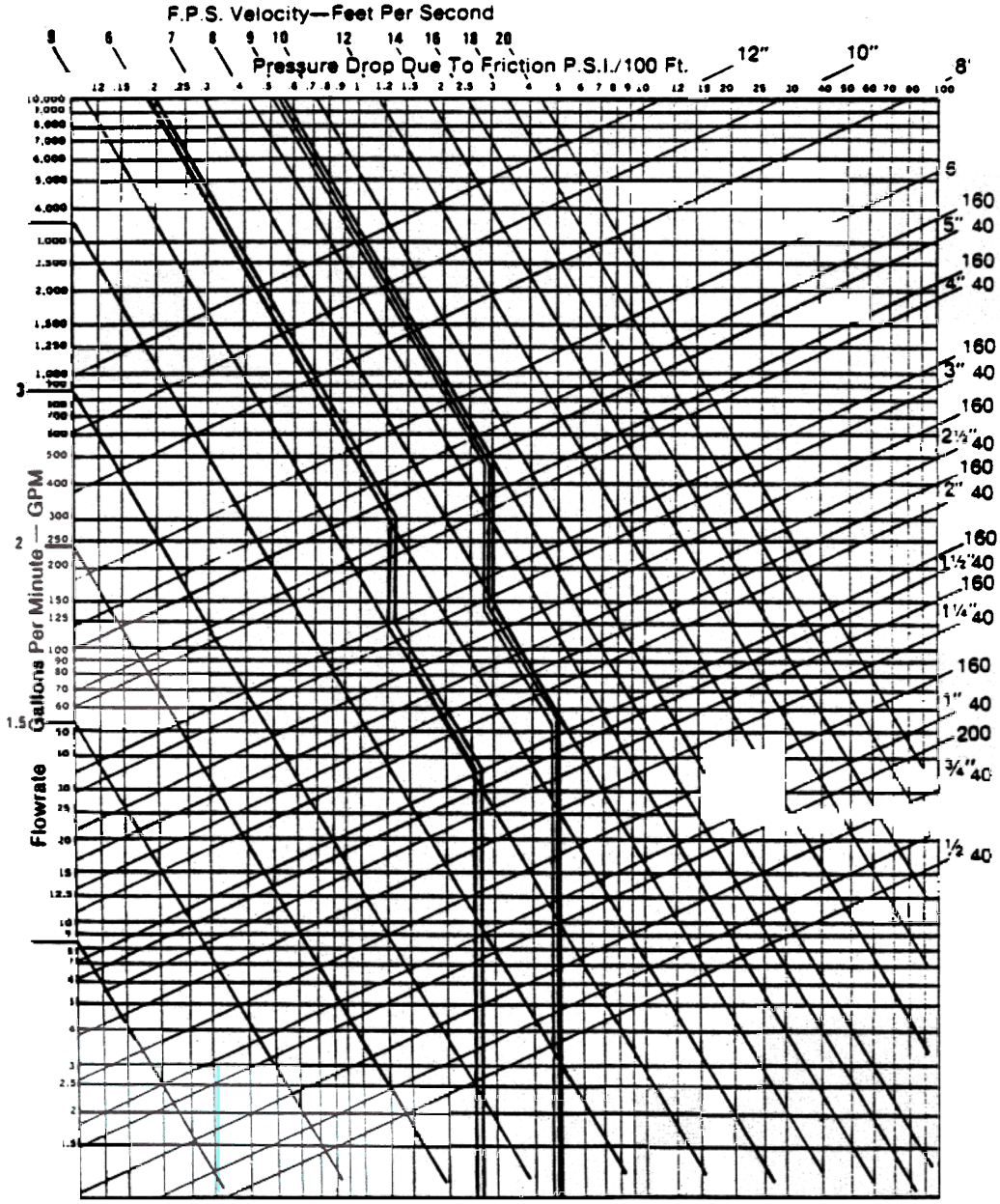

Figure 6.4

Pressure Drop in Plastic Pipe

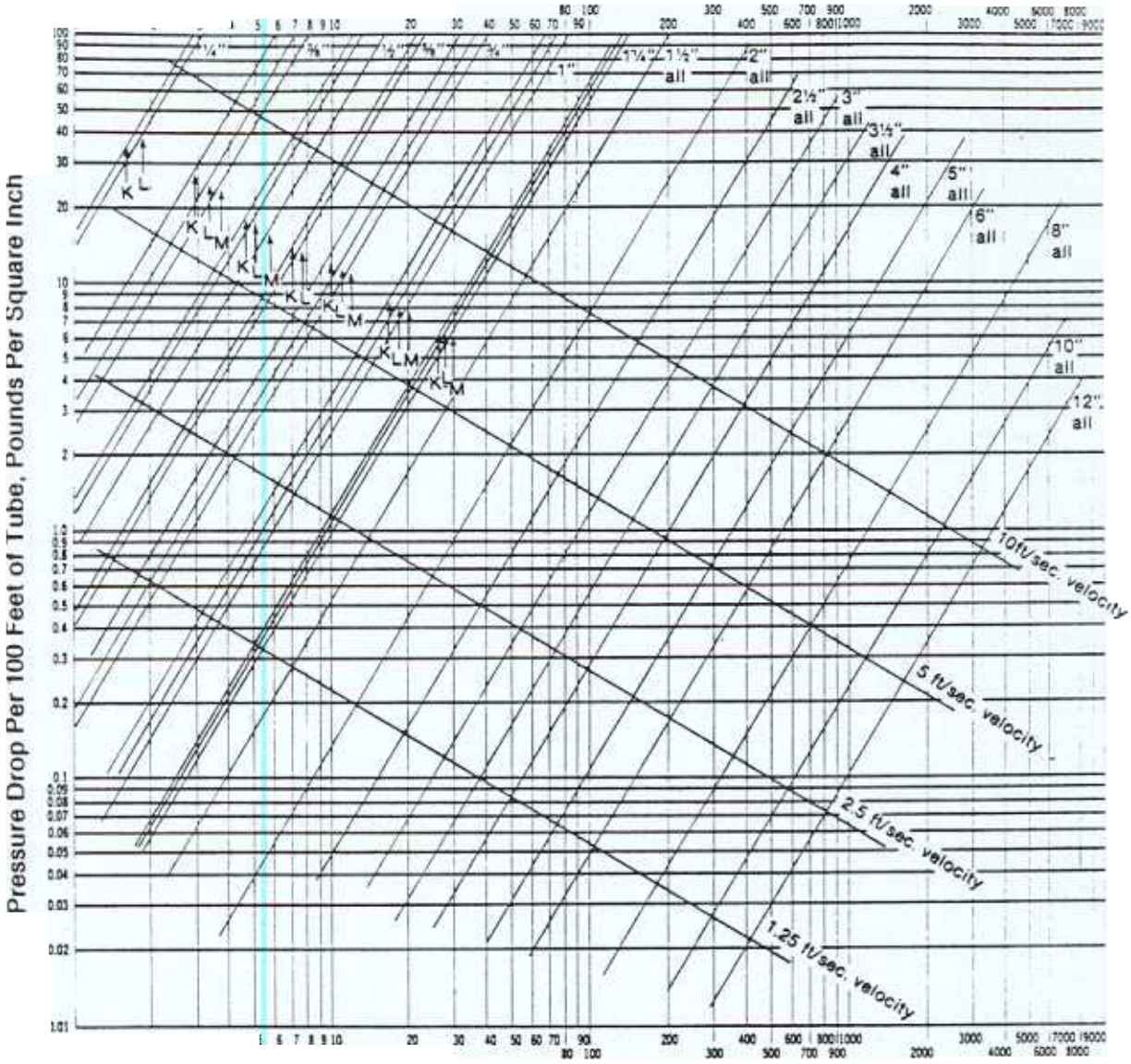

NOTE: Fluid velocities in excess of 5 to 8 ft/sec. are not usually recommended

Figure 6.5

Pressure Loss and Velocity Relationships for Water Flowing in Copper Tube

(Note that the Axis Labeling is Different from Figure 6.4)

STEP 5 Determine the size pump which will be required if a gas-fired pool heater is added which causes an additional pressure drop of five psi

Cause of Pressure Drop	Pressure Drop Psi	Pressure Drop Ft of Water
100 ft 1½" schedule 40 plastic pipe	8	18.5
Fittings	4	9.2
Valves	5	11.6
Filter	5	11.6
Pool heater	5	11.6
Lift head		3
Total		65

Figure 6.2 shows that a one-hp pump will pump about 50 gpm against 65 feet of water. This is probably close enough to the required volume for practical purposes. (The turnover time is a littler longer -- nine hours.)

Discussion Under these conditions, using two-inch pipe reduces the total pressure drop to about 50 feet of water but this does not allow us to use a 3/4-hp pump because the smaller pump will only circulate 46 gpm against a 50-foot head. (In this case the turnover time would be increased to 10 hours should the 3/4-hp pump be used.)

STEP 6 Determine the size pump which will be required if we add a solar collector system and a gas-fired backup heater. A pressure drop of two psi is expected across the solar collectors The system contains an extra 100 feet of pipe and a vacuum breaker located 12 feet* above the center of the pump's impeller

*As previously noted, relocating the vacuum breaker to the feeder line from the pool to the collector array can cause a balance of the static head pressure (flow down balances flow up) and reduce pump hp requirements by 15 ft of water head. This may be done in such a way as to permit complete system drainage. (See FSEC IN-13-83.)

Using 1½" and 2" Pipe

Cause of Pressure Drop		Pressure Drop Ft of Water
100 ft 1½" pipe	8	18.5
fittings	4	9.2
100 ft 2" pipe	3	6.9
fittings	1+	2.3+
Valves	5	11.6
Filter	5	11.6
Solar Panels	2	4.6
Gas heater	5	11.6
Static head (3'+12')		15
Total		92

Using Only 2" Pipe

Cause of Pressure Drop		Pressure Drop Ft of Water
200 ft 2" pipe	6	13.9
fittings	3	6.9
Valves	5	11.6
Filter	5	11.6
Solar Panels	2	4.6
Gas heater	5	11.6
Static head (3'+12')		15
Total		75

Figure 6.4 shows that if 100 feet of 1½-inch pipe and 100 feet of two-inch pipe are used to make the connections, a two-hp pump will move only 35 gpm against the 92-foot water head This increases the turnover time to about 13 hours, so a 2½-hp pump will be required If 200 feet of two-inch pipe is used, a 1½-hp pump will move 52 gpm against the 75-foot head. Again, in this example, 52 gpm will probably turn the pool volume over in an acceptable period of time (8.6 hr)

Discussion: Another option applicable to retrofitting a gas-heated pool piped initially with 1½-inch pipe and a one-hp pump is the addition

second small pump installed as pictured in Figure 4.1d The additional pump will be required to overcome a static head of 12 feet of water and a friction head of 28 feet of water if 1½-inch pipe is used to connect the solar panels to the system The pressure loss across the panels will still be 4.6 feet of water The total pressure drop that the added pump will be required to overcome will be 12 + 28 + 4.6 or about 45 feet of water head Figure 6.2 shows that a 3/4-hp pump will circulate 49 gpm against a 45-foot head. It should be noted that the two pumps working in series will assist each other and in most cases the turnover times will be no more than eight hours

Two pumps require more maintenance than does one but the solar booster pump may be turned off when circulation through the panels is not desired. This reduces electrical consumption

A final option for pool heating is the addition of solar collectors without a fossil-fired backup system Referring to the immediately preceding piping options, the elimination of the gas-fired heater reduces the pressure drop from 92 to 80 feet of water if an additional 100 feet of 1½-inch pipe and 100 feet of two-inch pipe are used to make the connections

Figure 6.2 shows that a two-hp pump will pump 54 gpm against an 80-foot head. (The turnover time is 8.3 hours.)

If two-inch connecting pipe is used throughout, the total pressure drop is reduced to about 63 feet and a one-hp pump will deliver 50 gpm against a 63-foot head (the turnover time is nine hours) A 1½-hp pump will circulate about 65 gpm against a 63-foot head (the turnover time is 7½ hours)

Table 6.1 presents each of the pool heating options and the corresponding pipe and pump sizes which yield the various pool turn-over time periods

Table 6.1
Pool Heating Options

Components	Pipe Size	Pump Size Required	Turnover Time
System with no heater	100 ft of 1½" schedule 40 plastic	1 hp	8 hr
	100 ft of 2" schedule 40 plastic	3/4 hp	8.6 hr
System with gas or oil heater (5 psi pressure drop)	100 ft 1½"	1 hp	9 hr
	100 ft 2"	1 hp	7.2 hr
System with gas and solar (15-ft static head)	100 ft 1½" plus 100 ft 2"	2½ hp	8 hr
	200 ft 1½"	2 pumps (1 hp + 3/4 hp)	8 hr
	200 ft 2"	1½ hp	8.6 hr
System with solar only (15-ft static head)	100 ft 1½" plus 100 ft 2"	2 hp	8.3 hr
	200 ft 2"	1 hp 1½ hp	9 hr 7.5 hr

None of the stated options alter the turnover rate of the pool sufficiently to require resizing the DE filter It should contain between 27/ft^2 and 33/ft^2 of filtration area

6.5 PRESSURE DROP ACROSS THE VALVES AND FITTINGS

Many swimming pool installers use the simple rules of thumb cited in the previous examples to determine pressure drops caused by the resis-

tance to liquid flow of valves and fittings However, it is important for the solar installer to realize that the actual pressure drops vary with both rate and mechanical characteristics of specific valves and fittings Table 6.2 presents frictional losses expressed in equivalent lengths of pipe for commonly used fittings (Most fitting manufacturers supply similar tables.) The sum of the equivalent length of all the fittings on the circulation system may be added to the actual length of pipe in the system before the pressure drop is read from Figure 6.4 (plastic pipe) or Figure 6.5 (copper pipes). The pressure drop across the backwash valve assembly is accepted as being five psi in the example Actually, this pressure also varies with flow rate and the mechanical design of specific valves The variation from valve to valve is too great to make a generalized tabular presentation of pressure drop much more useful than the five psi -of-thumb value Most filter and backwash valve suppliers can make available accurate tables or graphs for their valves The information usually is given in psi which may be converted to feet of water head by multiplying by 2.31

Table 6.2 Friction Losses in Fittings

Type of Fitting	Material	1"	1¼"	1½"	2"	2½"	3"	3½"	4"	5"	6"	8"	10"	12"
Standard Tee with flow through branch	Steel	6	8	9	11	14	16	-	20	26	31	40	51	61
	Plastic	9	12	13	17	20	23	-	29	-	45	-	-	-
	Copper	6	8	9	11	14	16	18	20	26	31	40	-	-
90-deg Long Radius Elbow, or run of Standard Tee	Steel	1.7	2.3	2.8	3.6	4.2	5.2	-	6.8	8.5	10	14	17	20
	Plastic	3	4	5	7	8	10	-	12	-	17	-	-	-
	Copper	1.7	2.3	2.8	3.6	4.2	5.2	6.1	6.8	8.5	10	14	-	-
Adapter-slip/solder fitting to thread	Plastic	3	3	3	3	3	3	-	3	-	3	-	-	
	Copper	1	1	1	1	1	1	1	1	1	1	1	-	
Insert Coupling	Plastic	3	3	3	3	3	3	-	3	-	3	-	-	
Gate Valve (fully open)		0.60	0.80	0.95	1.15	1.4	1.6	1.85	2.1	2.7	3.2	4.3	5.3	6.4
Swing Check Valve		7	9	11	13	16	20	23	26	33	39	52	67	77
Ordinary entrance		1.5	2.0	2.4	3.0	3.7	4.5	5.2	6.0	7.3	9.0	12	15	17

Friction losses expressed as equivalent lengths of pipe (feet)

CHAPTER 7

ACCEPTABLE INSTALLATION PRACTICE

7.0 INTRODUCTION

This chapter deals for the most part with the special difficulties encountered when solar pool heating systems are installed on existing structures. The incorporation of collector mounting hardware in new construction requires cooperation between the affected trades (plumbing, roofing, carpentry, electrical) but presents few other difficulties

Because unglazed, low-temperature collectors most often are used for swimming pool heating in Florida, procedures for mounting unglazed plastic flat-plate collectors, flexible solar mats and pipe arrays will be discussed first.

When installing these collectors, follow the same safety rules which are in common use in the building industry.

7.1 FLAT-PLATE COLLECTORS

The optimum collector slope for spring and fall operation is equal to the latitude of the site. The best slope for winter is the latitude plus 15° and the collectors should face south if possible If roof space which faces within 45° of south is available, the collectors can be mounted directly on the roof. Remember that only a small penalty is paid for modest deviations from optimum slope or orientation Supports can be constructed to mount collectors at the ideal orientation, but, except in new construction, the additional cost is generally prohibitive Occasionally it nay be necessary to increase the collector area to compensate for less than optimum slopes or orientations

Collectors should be securely fastened to withstand maximum expected wind loads. Building code requirements for maximum wind velocities vary within the state of Florida from 80 to 130 miles per hour Wind loads at roof level may exceed 75 pounds per square foot Check the local building regulations for wind load provisions in your area.

Numerous mounting techniques are used to mount the large arrays of collectors required for pool heating Test data is not available for most mounting techniques, but one of the largest collector manufacturers did run wind tunnel tests on its recommended installation procedure and the mounted collectors withstood winds in excess of 100 mph

7.1.1 Procedures

To begin the installation, lay out the collectors on the available roof area avoiding as much as possible that portion shaded by trees, parts of the building, or other obstructions. If large numbers of collectors are involved, they may have to be divided into several banks with collectors in each bank plumbed in parallel. Plumbing arrangements from ban to bank are discussed in a following section

Once the placement is established, the collectors should be connected Short, flexible couplings made of EPDM or butyl rubber often are used. They usually are slipped over the ends of the headers and are clamped firmly with stainless steel clamps. Once fastened together the collectors are cumbersome to move about; be sure they're in their final positions before the connections are made

Collectors often are mounted directly on asphalt shingle and tar and gravel roofs. An <u>insulating</u> support structure is sometimes used to

protect the panels from abrasive roofing materials and to prolong their

The substrate can be spaced up from the roofing surface to provide ventilation for the underlying roofing membrane beneath. This

retard the development of fungus or mildew. Common 2½-inch, corrugated, four-ounce fiberglass panels are among the materials used for supporting flat, plastic solar collectors, but they should be insulated to prevent heat loss from the back of the collectors

Opinions of experienced roofers differ about the use of the substrate. Some recommend at least a 1½-inch air gap to provide for air circulation; others feel that a substrate may not be at all beneficial Numerous systems have been installed without substrates, but long-term durability data is not yet available. (Few problems with this kind of installation hav as yet been brought to the attention of the Florida Solar Energy Center staff.)

Collectors should be laid on the roof or substrate and strapped down at the header on both ends. At least two -- preferably three --cross straps should span the panel to further secure it. Figure 7.1 shows one possible arrangement

One end of the panel can be fastened to the roof with a short strap or clamp around the header. The other end should be fastened

an elastic material or spring to allow for expansion as the collector temperatures change--a 10-foot plastic collector may expand and contract as much as an inch in length. Straps should be installed across the panel body; one at either end, within a foot of the headers, and one across the middle are recommended. The straps should be made of material such as nylon or plastic-coated metal that will not scratch or abrade the collector, since they will rub across its surface The bands

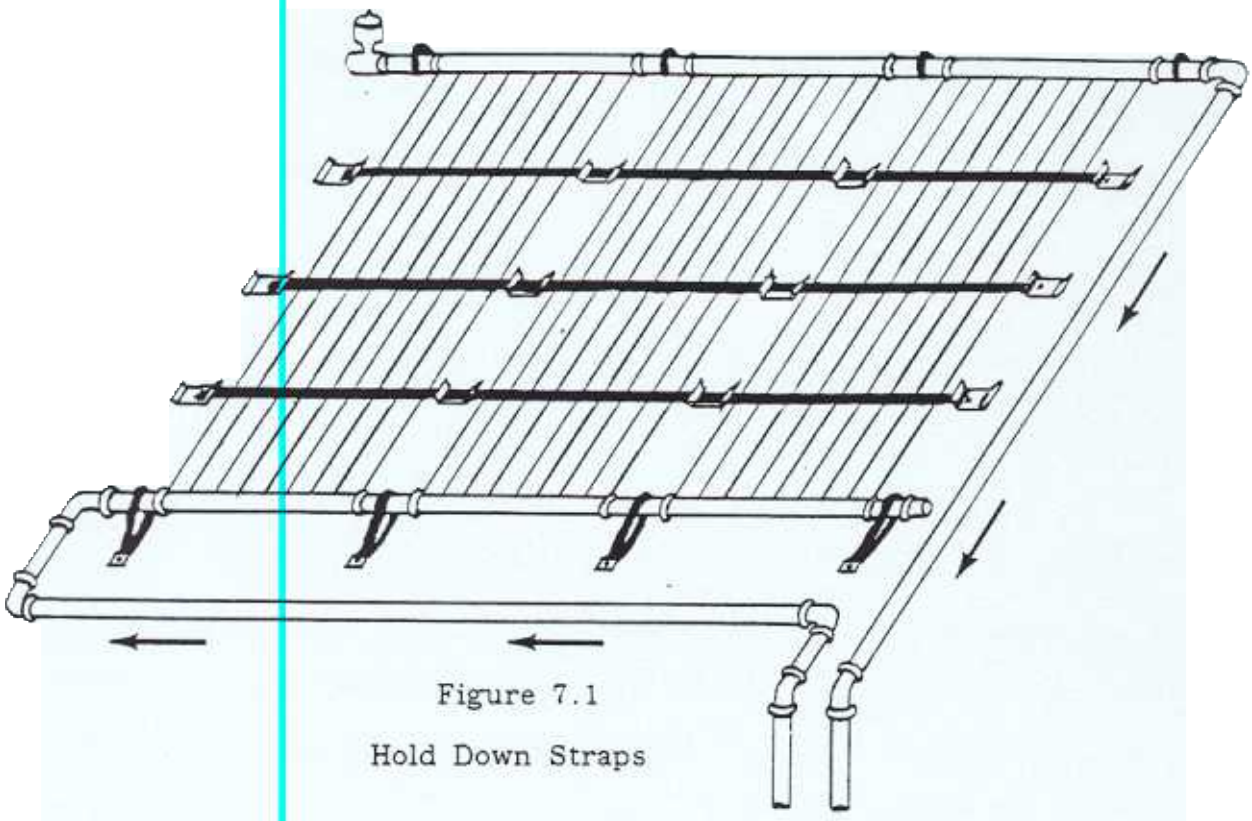

Figure 7.1

Hold Down Straps

should be snugged to clips fastened approximately an inch from the edge of the collector.

Figure 7.2 shows a typical mounting clip, which may be made of rigid plastic or metal. On asphalt shingle roofs, the clips may be fastened directly on top of the shingles--1/4-inch lag bolts long enough to penetrate the roof sheathing generally are recommended. In keeping with good construction practice, the lag screws should be screwed into roof rafters (rather than just roof sheathing) to keep the collectors secure. Because this mounting procedure is so tedious, many installers follow the simpler practice of driving lag bolts directly into the sheathing. The first full-scale hurricane will test this practice. Under either condition, a pilot hole should be drilled for the lag screw and after the drill chips are cleared away a sealant should be injected with a cartridge gun into the hole. An excess of sealant should be used to form a seal between the mounting cl

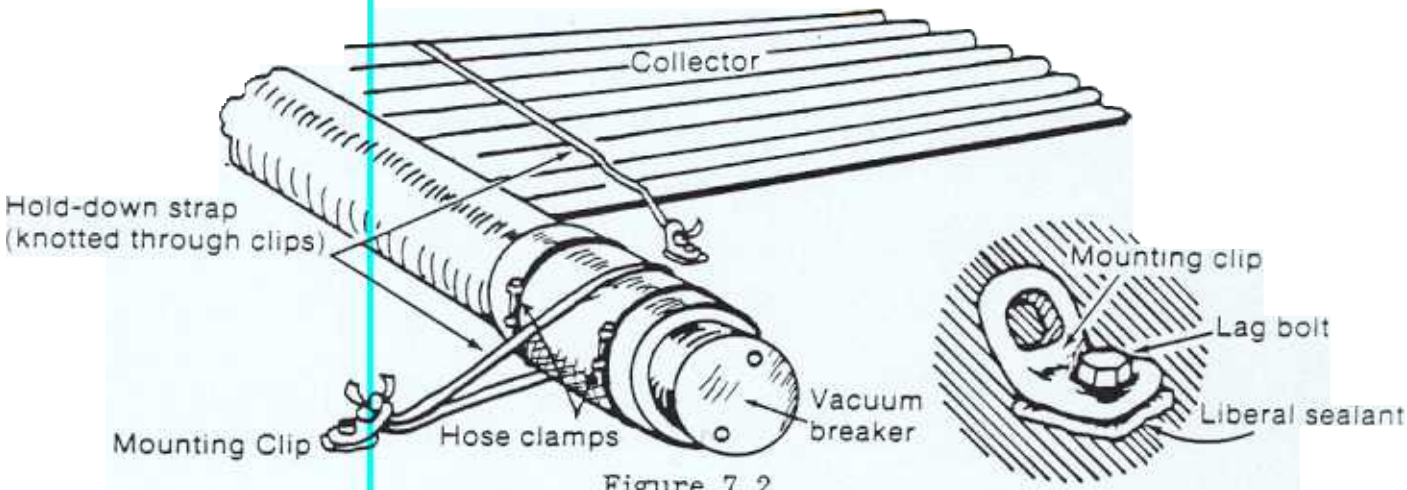

Figure 7.2

Collector Mounting Details

lag bolt is tightened. Polysulfide or silicone sealants adhere well to common building materials and appear to be very durable. Urethane sealants are also very durable but do not stick as well to some roofing surfaces.

Sealing 100 or more roof penetrations is a tedious procedure that must be done with the utmost care. Two installers may want to take turns to make the job go easier.

Sealing of mounting brackets on tar and gravel (builtup roofing) requires careful cleaning around the bracket. Scrape off the old gravel down to the tar, and clear off all dirt and residue. If the tar surface is very dirty or irregular, soften it with a solvent such as mineral spirits. After sealing the clip with polysulfide, pour roofing tar over the bracket base and cover with gravel. This last step is necessary to prevent ultraviolet damage to the tar and premature failure of the roof.

Mounting collectors on other roof types is more difficult. On cedar shake roofs, mounting screws should pass through the shakes and fasten securely to the plywood or purlins beneath. Don't be stingy -- use good quality sealant and enough of it to form a good, sealed penetration. Don't tighten the fasteners tight enough to split the shake.

Concrete tile roofs, especially common in the south part of Florida present special mounting difficulties. The safest solution is to construct a rack to support the collectors above the tile surface. The rack should be constructed of a durable material such as aluminum cedar or pressure-treated wood. It should be strong enough to withstand maximum anticipated wind loads. Insulated substrate and collectors may be fastened to the rack. The rack itself must be securely fastened to the roof trusses, not to the sheathing.

Figure 7.3 illustrates a typical mounting bracket arrangement. To install the bracket, a tile must be removed or broken, exposing the waterproof membrane on the sheathing below. This waterproof surface (commonly called slate), not the tiles, forms the moisture barrier and must be resealed where mounting bolts penetrate it.

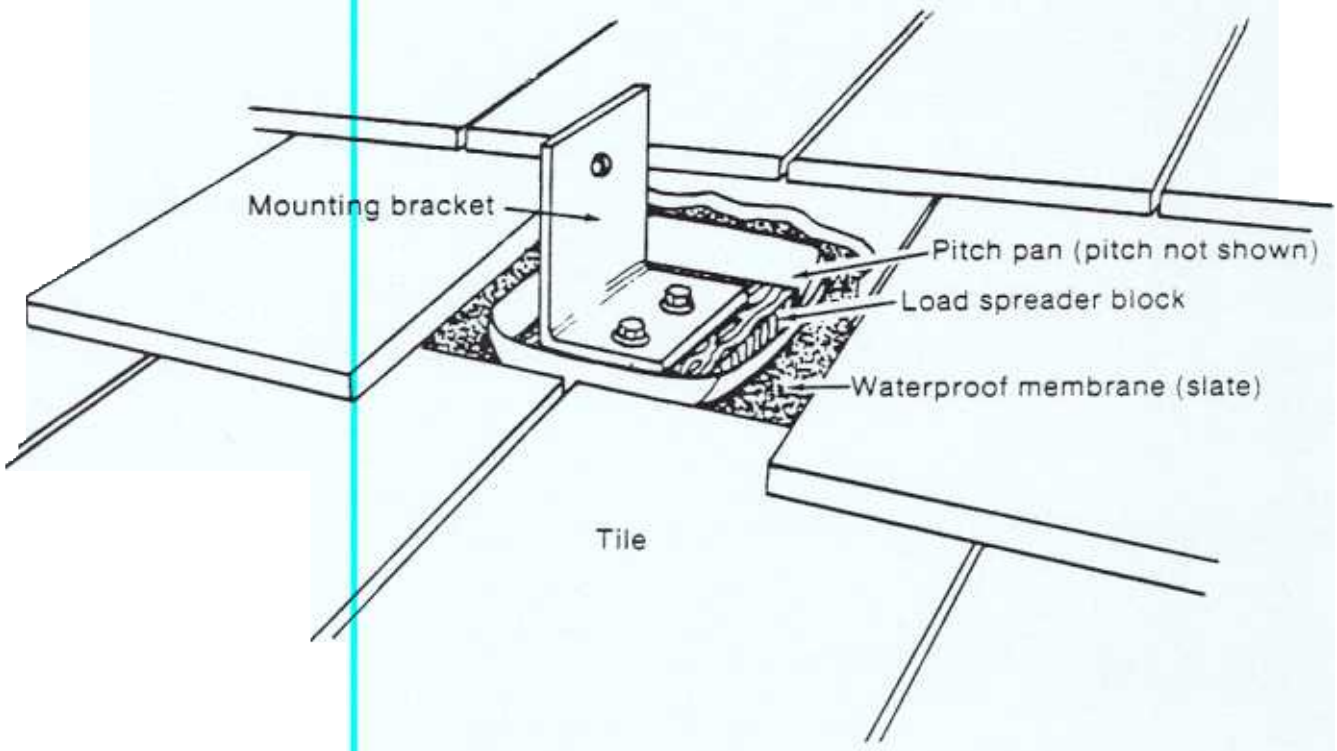

Figure 7.3

Mounting Bracket for the Roof

The mounting location should be free of dust and debris. Roofing mastic should be applied to the bracket and slate to form a seal when the bracket is drawn down. (Pitch pans around the roof penetrations be required in some areas They are discussed in some detail in Section 5, Volume II of the FSEC Solar Water and Pool Heating Manual.) A substitute for the broken tile may be made from cement mix (using adjacent tiles as a model) and tinted to match the roof. Aluminum and copper materials should be protected from contact with the cement by a layer of tar to reduce corrosion.

Fastening schemes have been proposed which rely upon sealing the penetration at the tile surface. Since the waterproof membrane is the tile itself but rather the slate membrane beneath, these methods are not effective and should be avoided.

Spanish or barrel tile roofs present another tough collector mount-problem. is extremely difficult to walk on them without breaking tiles, and it is also difficult to make substitute tiles. Some installation contractors add a substantial surcharge to jobs that require the mounting of collectors on barrel tile roofs (Certain ceramic barrel tile costs more than $600 per 100 square feet.)

7.2 PIPE COLLECTORS

Solar collectors made of lengths of black pipe are common and easy to install, especially on flat roofs

To stabilize spacing, the pipe should be laid on support cradles that raise it off the roof surface. These cradles can be made from 2" x 4" or 2" x 6" rot-resistant wood (plastic supports are available from some manufacturers). Holes equal to the pipe diameter (OD) are drilled with a hole saw through the wood at the appropriate spacing, and the

wood is then sawed lengthwise to produce two cradles. The cradle rests on the roof surface, and the pipe rests on the cradle. Supports are required near the ends and at approximately four- to six-foot intervals to minimize sagging. The supports should be placed over roof rafters whenever possible.

Wind loads in Florida can exceed the dead weight of the collector pipes even when they are filled with water so they should be secured to the roof. This can be accomplished by running straps over the pipes and fastening them securely to cradles that are anchored into the roof supports. Figure 7.4 illustrates the preceding instructions.

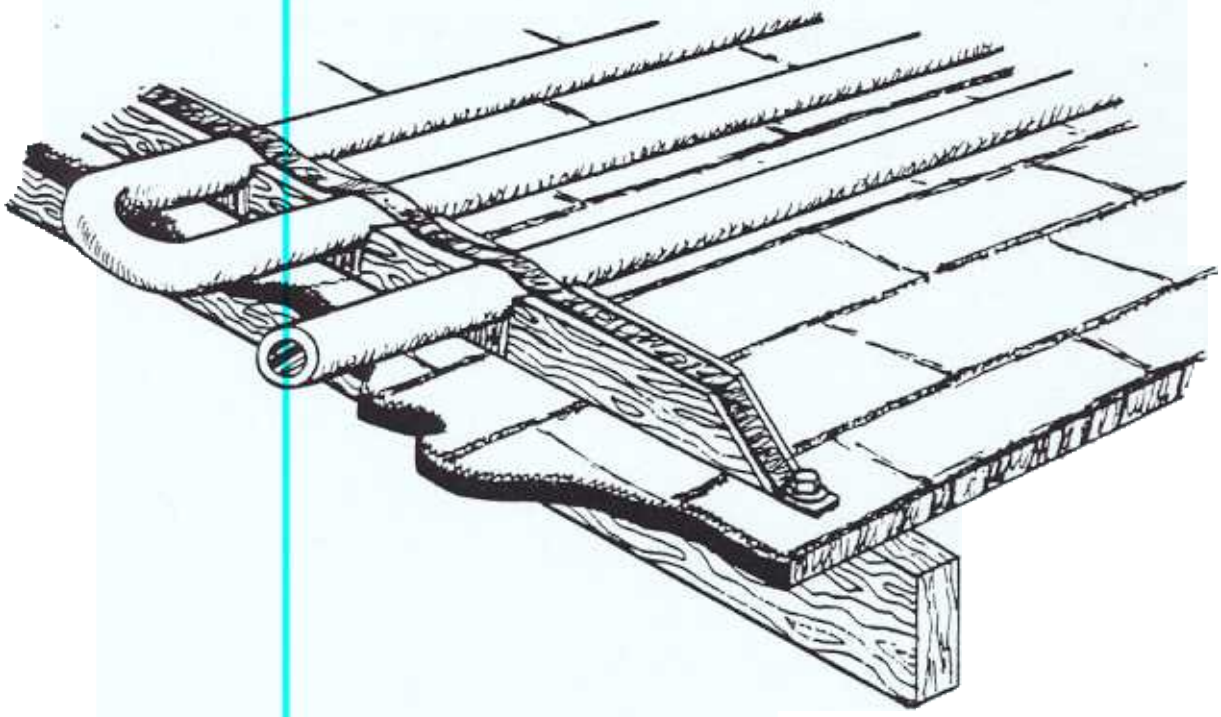

Figure 7.4

Pipe Collector Mounting

As in the case of flat plastic collectors, the first step in pipe collector installation involves bringing the materials up to the roof and laying out the pipe in a location as free from shade as possible Spacing between th lengths of pipe will depend upon the type of return bends used to join the ends, but a gap equal to one pipe diameter (OD) generally is left between lengths to reduce shading

Once the collector location has been established, the support cradles should be secured so that they span several trusses or run lengthwise along the truss. This distributes the collector weight evenly and properly spaces the parallel pipe runs. The retaining brackets now should be installed. On flat, builtup roofs, the gravel should be scraped off down to the tar beneath

Clean the area well. When all the gravel has been removed in an area large enough to accommodate the cradle, set the cradle in a bed of mastic and bolt it to the rafter(s) beneath it. Be sure to completely cover exposed bolt heads. (Pitch pans may be required for some installations.) Thoroughly scrape and clean the area at least four inches out from the outer edges of the pitch pan, bed it in a layer of mastic, and seal the flange with two layers of tar paper and mastic and cover the installation with gravel. Fill the pan with roofing tar which will remain pliable over time without cracking.

Experienced roofers state that the single most common cause of leaks when installing devices on the tar and gravel roof is failure to strip away all the gravel before making the installation. Some leaks are very difficult to find after the penetrations have been covered with gravel Thus pays to make roof penetrations with great care

PIPING

ola in poo lle to lesign to th high

flo th bj in ipin olar

to vid hi ol fl th lo th

po b

to olle to

lo erature coll to la ti pipe ed in th

pl in th pool to th la: coll to V AB

ipe 40 th onl ed terials this tic

ular p rfo tisf torily N th terial

th tem eratur D to th derate op tin

ture ip in ulati is

empe tu: coll to uir in

In al tio flo th gh typical dium

tu: lle all le p th tem tu: coll

th th tu: will (alth gh th ill

of V AB da this tu: tempe tu: which

is ally .00°F Ho if th flo to hile th

ining th in th coll to ch 200 Wh th

fl es bli th 200° is gh to la ti

C tl co per ip uld be ed th la

of th th tire tu: lin Wh pe ip

to ely lum di empe tu coll is

all with to in in ulati whi

ult gr datio UV

ra pin tap re aila to ro th th ti

pipe whic xp to th

Local plumbing requirements should be adhered to when installing piping leading to and from the collectors Since large-diameter pipe is quite heavy when filled with water, sturdy supports will be required cuts should be deburred before assembly to reduce resistance to Leaks can be avoided by using the correct cement for the pipe involved and by properly preparing joints Because plastic expands and contracts considerably with temperature changes, allowances should be made for change in length. Your pipe supplier can provide you with specific data on the kind of pipe used for a particular job

7.3.2 Piping Between Collectors

About the same amount of water should pass through each collector. On large installations it is necessary to divide the solar collecting panels into groups and connect the groups with pipe. This requires the piping layout be carefully designed and constructed Most situations encountered can be satisfied using principles discussed in section, but for extremely complicated cases it may be wise to consult a hydraulic flow specialist.

Pool heating collectors almost always are connected in parallel Parallel connections are shown in Figure 7.5a series connections in Fig-7.5b. In the series arrangement, water passes through one collector and then through the next, increasing the pumping horsepower required to maintain adequate flow as well as causing the downstream collectors to operate at higher, less efficient temperatures. Parallel connections, in which the water is returned directly back to the pool after passing through one collector, are the better choice because those difficulties are avoided.

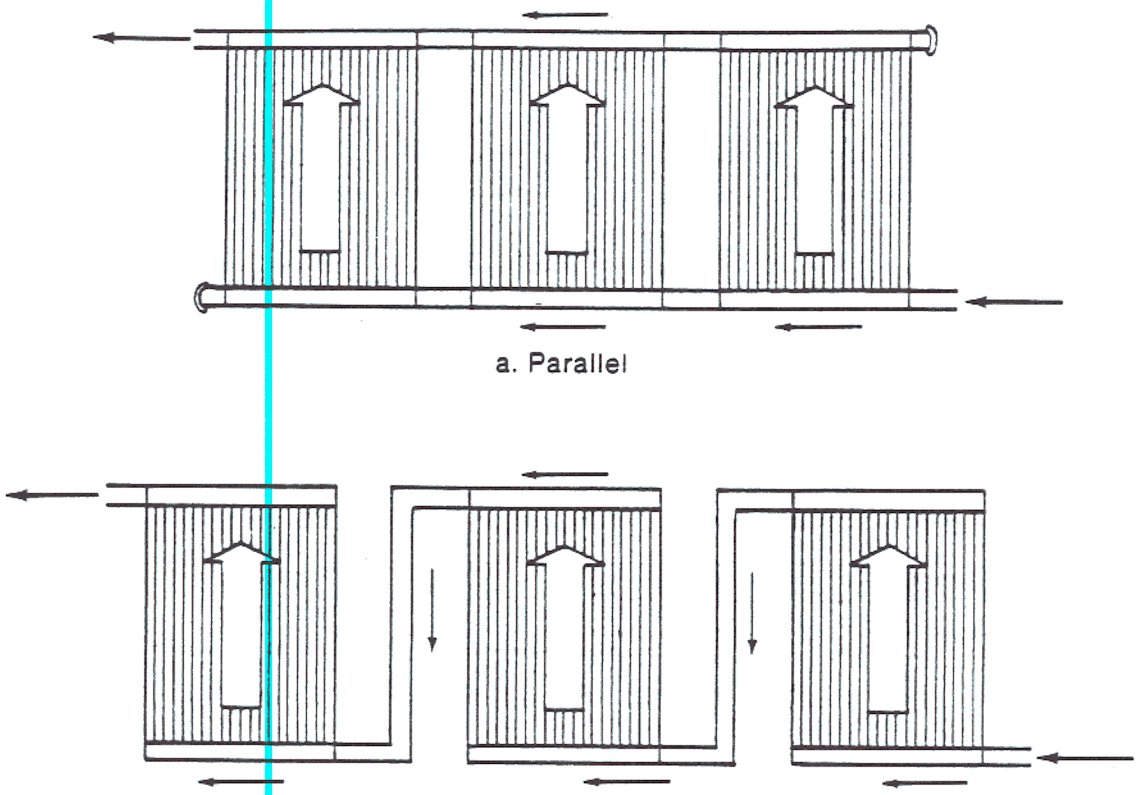

a. Parallel

b. Series (note drainage problem)

Figure 7.5

Collector Connections

The feed and return lines leading to each collector should b approximately the same length. Figure 7.6a illustrates the preferred arrangement, and Figure 7.6b shows a common, but less efficient connection where the flow tends to be short-circuited through the firs few collectors and those at the end are starved for flow (causing reduction of their performance). Of course, if the pressure drop in th headers is very low compared with that in the panels, little imbala

caused by the piping arrangement pictured in in 7.6b. In Figure 7.6a the length of the water path is the same for all collectors, so the flow is evenly distributed. This style of piping will require extra pipe, but improved collector performance usually compensates for the additional cost.

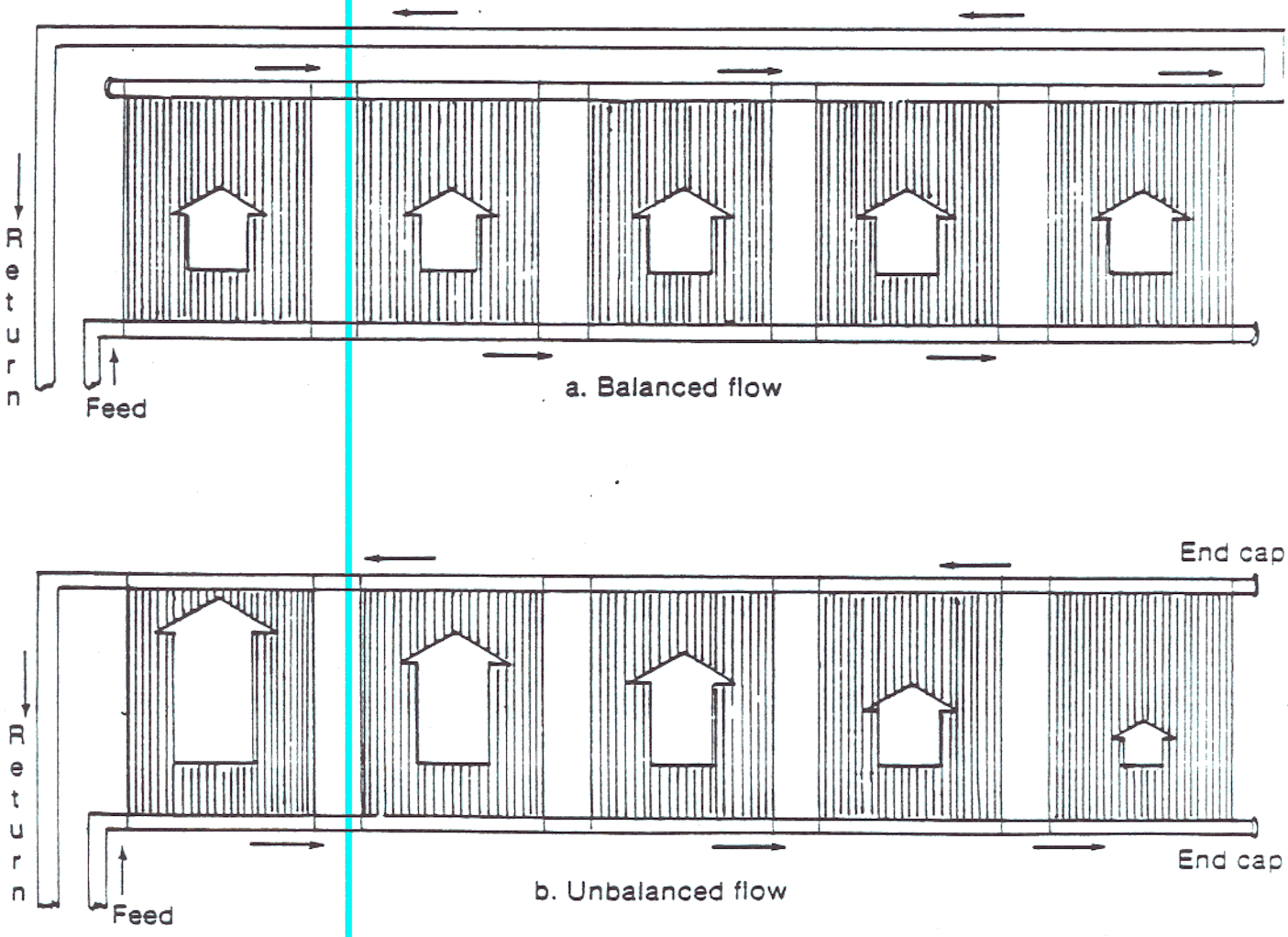

Figure 7.6

Flow Balancing in Collector Groups

Groups of collectors at different heights should be plumbed in such a way that they all receive water from the lowest point in the system and return it from the highest point. Figure 7.7 illustrates a properly plumbed system. The dashed line indicates a tempting, but unsatisfactory, arrangement. If the return lines do not come from a common height, flow through the panels will be uneven, causing a reduction in performance. Even with this piping layout a balancing valve may be required to reduce the flow rate in the lower collector(s).

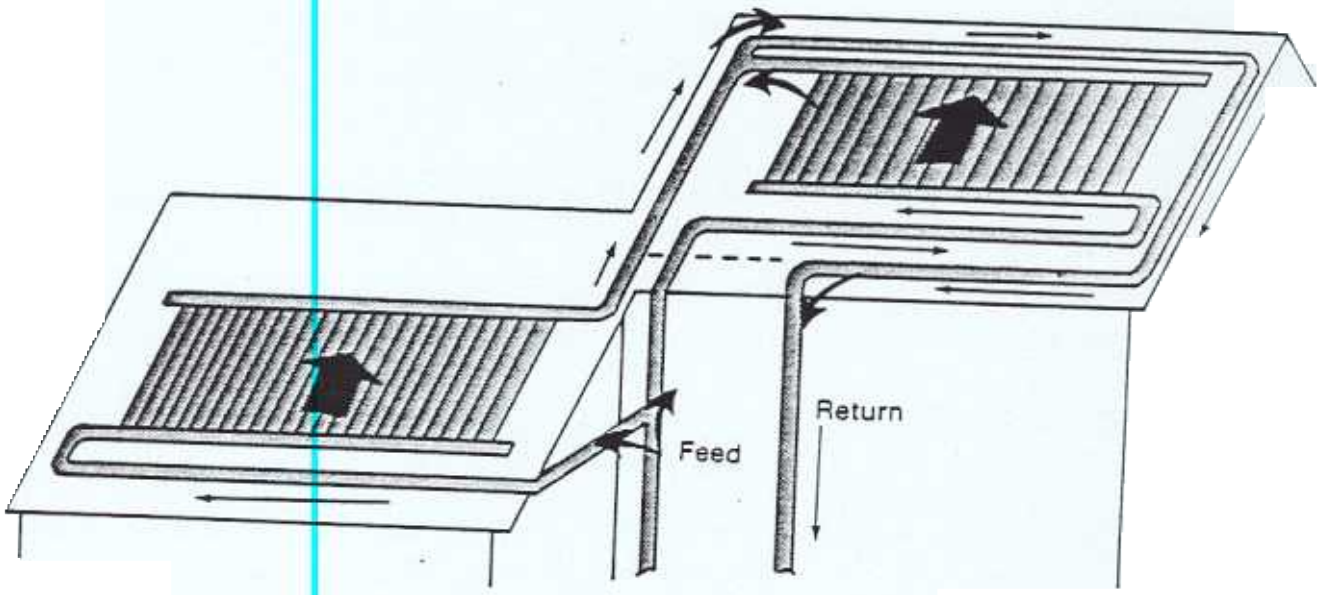

Figure 7.7

Plumbing Collector at Different Heights

Balancing al b d to btain unif flo dis rib ti th dif icul tuati which h te quir ak impracti al alan th fl ith im p bing rrangem alancing al (d flo m if economics p rmi) ul tall d th d lin to ch group of coll to: tartin with all al pl tel op grad ally clo th approp te al til th ired flo f ch gro p is obtain d A le curate (also les expensiv) alt tiv to th of flow is to m th tl emperatu of vario llecto group d dju th alancing al til th emp tu are ithin few d gr f ch th Connec b tween collector d plumbing pip commonly d with yn tic rubb pling th slid th ting pip d th tightly clamped by tainle el In d to ommoda th rmal xpansion and misalignm th upling g than tho d betw panels A elief valv y b requir d in th f dlin ll to group dmi air into th y tem wh th h ts do d th to th llectors to drain If ary heigh dif lief val b in talle on mo th group of to cilitate drainag Th elief al dmi into th during p op tio it doe th y m be is d will amoun ch cal d to tan bblin also will p gr i balan th d d th tatic h d m th al m b in talled poin th y is bo tmosp ric p This requir cal ulatio y in tall f multi to y building th

water flowing down the return pipe may cause a vacuum to form in that pipe (if it is more than about 33 ft long in vertical distance).

A special note of caution is in order when plumbing medium-temperature collectors: During stagnation, these collectors can turn to steam the water they contain. This creates a hazardous situation In order to prevent possible damage or injury, pressure and temperature relief valves should be installed on each group of collectors Plumb the discharge line to a safe drain, away from people and away from roofing materials, which may be discolored by steam or high-temperature water

7.3.3 Flow Control and Safety Devices

One of the most important components in the flow control system is the control valve normally installed in the main filter flow path after the collector feed line and before the collector return (Figure 4.1b) Although this valve can be as simple as a manually-operated gate valve, for convenience, it is generally operated automatically

Several types of control valves are available. Among those most frequently used are gate valves, bladder-type pinch valves or specially constructed variations of irrigation valves

The pinch valve is one of the earliest automatic valves used on solar swimming pool systems It consists of a flexible rubber cylinder that accepts pipe at either end and that has an inflatable rubber bladder inside. The bladder can be pressurized to shut off the flow. Small plastic tubing through which the bladder is inflated and deflated is connected to a fitting on the valve and terminated at the control box.

In one control strategy, the valve is operated by an electronic control that measures collector temperature and compares it to pool temperature The upper (collector) sensor is mounted in a black plastic housing that has an absorptivity for solar energy approximating that of the solar panel. Since the sensor temperature should simulate the collector temperature, it should be mounted alongside a collector panel and fastened to the same surface to which the panels are fastened Wires to the sensor carry low-voltage electricity only; an electrician is not required for their connection. All wire connections should be made secure and watertight, preferably with heat-shrinkable insulating tubing or durable sealant

The lower sensor, which measures pool temperature, should be protected from direct contact with the pool water to prevent galvanic corrosion. This may be accomplished by encapsulating it and its lead wires in a durable potting compound (epoxy for example), or installing it in a "well" installed in the pipe between the pool and the circulation pump As a las resort the sensor may be taped to the outside surface of the same pipe and thoroughly insulated. It is important to ensure that the "cold" sensor registers the temperature of the pool water not that of the ambient air or that caused by the sunshine warming the sensor capsule

The electronic control itself requires electrical power Sometimes it can be connected in parallel with the pool pump or timer, but since 120V or 240V electricity is involved you should consult your local building officials to find out if an electrician is required to make the connection. Approved conduit should be used for this wire

The final step in the installation of the control system is the connection of two pressure lines between the pool pump and the control box. Small-diameter (1/8-inch) plastic lines generally are used most pool pumps have a 1/4-inch, threaded pipe plug in the side of the strainer housing (near the bottom), the low-pressure line usually is attached to an adapter at that point The high-pressure line should be tapped into the pipe on the discharge side of the pump

When the upper sensor signals that the collectors are warmer the pool water the electronic control opens the line from the discharge side of the pump and inflates the bladder in the pinch valve diverts flow through the solar system. When the upper sensor signals that the collectors are cooler than the pool water, the line from the suction side of the pump is opened, forcefully deflating the bladder allowing flow to bypass the collectors. Such rubber pinch valves have operated successfully for many years

Another popular control valve, the irrigation style valve, achieves the same results but operates in a slightly different fashion It is plumbed into the system by standard piping procedures A suction line is tapped into the pump inlet strainer housing, but in this case it is connected to the valve body itself A pressure line is not used. A low-voltage wire also connects a small solenoid valve mounted on the valve body to the control box.

The control compares collector temperature with pool temperature as before. If solar heat is available, an electrical signal causes the solenoid valve to open the suction line. This suction closes the valve diaphram diverting flow through the collectors. When solar energy is not available, the solenoid valve remains closed, the

valve diaphram (which is spring loaded) opens, and the flow bypasses the collector array (In another version the spring loading keeps the valve diaphram closed and the solenoid induces its opening.)

ACTIVATING THE SYSTEM

After installation is completed, it is necessary to activate and test the system for proper operation. A few of the most important checks are discussed here

7.4.1 Purging the System

Bits of plastic from rough pipe cuts, sand and other debris should be flushed from the system to avoid clogging small fluid passages in the collectors Purging can be accomplished by leaving open one or two strategically placed joints The circulation pump can be turned on briefly to flush water through the system; then final connections can be made Small amounts of pool water can be discharged onto grass or sand, but large volumes should be piped to safe drains.

7.4.2 Pressure-Testing

The entire system should be pressurized to the maximum operating pressure; this can be accomplished in a number of ways

If piping passes through critical areas (like an attic) where a leak during the test could cause significant damage, the system should be pressurized with an air compressor Leaks can be located readily by listening for the hiss of escaping air

Installations where all piping is routed through areas where a temporary leak will do no harm may be pressure-tested by turning on

the circulating pumps The appropriate valves in the circulation system should be partially closed to produce higher than normal operating pressures in the new piping Be sure to have someone standing by ready to turn off the pump in the event a leak is discovered

During th pressure check, every connection should be visually inspected and shaken to ensure that it is well made

7.4.3 Testing Control Devices

Automatic control devices should be checked for proper operation Consult the manufacturer's specifications for the controls being used and determine the possible operating modes. Test in all of these modes and make a permanent record of the results. Checking control operation immediately after installation can prevent costly call-backs later

7.4.4 Testing Flow Rates

Proper flow through the collector array and filtration system is required. Inexpensive flow meters are available and should be used to confirm that desired rates have been achieved. As previously mentioned, turn-over time must not be increased above an acceptable level

7.4.5 Testing Temperature Rises

The temperature difference between the feed line to the solar system and the warmer return line should be checked Remember--the temperature rise on even a sunny day should be quite modest, approximately 10°F, for low-temperature collectors. Thermometers installed in these lines can be used to make accurate readings

If the temperature rise to too large, it indicates that not enough water is passing through the collectors. Check the system thoroughly and correct the problem, because collector efficiency drops dramatically as the operating temperature rises Lots of water warmed slightly is a less costly option than a little water warmed a lot

CLEANUP

Whether you found the installation site clean or messy, leave it clean.

Make sure that you have repaired any damage occurring during installation (like broken roof tiles) or make arrangements to have it

Ask the owner to look things over to be sure he or she is satisfied Let the owner see how well you have cleaned up

Sometimes such thoughtfulness on the part of the installer makes the difference between a satisfied customer, who will speak highly of your work, and a dissatisfied one (who won't).

INSTRUCTING THE POOL OWNER OR MANAGER

There are several important reasons to spend a few minutes instructing the pool owner or manager on the operation of the new solar pool heater. First, it will enable the owner to ascertain whether the system is operating and thus reduce "false alarm" callbacks. Second, it will enable the owner to explain the new unit to friends and associates Third, it will equip the owner to make minor adjustments and reduce service calls for the installer. Provide an owner's operation and maintenance manual which includes minor trouble-shooting and correction instructions

Explain the operation of all valves and controls and how the water circulates in the various modes It is desirable to spend a little time on the automatic control so that the owner can make seasonal or other adjustments that may be required

It is very important to explain that the amount of energy being delivered to the pool is the product of the temperature rise and the flow rate. High temperature rises feel impressive, but they cause the collectors to operate inefficiently and deliver less heat to the pool Sometimes this point is difficult to make, so you may have to explain it in several different ways.

Balancing valves can be used to obtain uniform flow distribution in other difficult situations, which occur when site requirements make it impractical to balance the flow with simple plumbing arrangements. Balancing valves (and flow meters, if economics permit) should be installed in the feed line to each group of collectors. Starting with all valves completely open, gradually close the appropriate valve until the desired flow for each group is obtained. A less accurate (and also less expensive) alternative to the use of flow meters is to measure the outlet temperature of the various collector groups and adjust the balancing valves until these temperatures are within a few degrees of each other.

Connections between collectors and plumbing pipe commonly are made with synthetic rubber couplings that slide over the header and connecting pipe and that are tightly clamped by stainless steel bands. In order to accommodate thermal expansion and misalignment, these couplings are longer than those used between panels.

A vacuum relief valve may be required in the feedline to the collector group to admit air into the system when the pump shuts down and thus, to allow the collectors to drain. If necessary, because of height differences, vacuum relief valves can be installed on more than one group of collectors to facilitate drainage. The vacuum relief valve must not admit air into the system during pump operation. If it does, the system may be noisy and will consume excessive amounts of chemicals due to constant bubbling. It also will prevent gravity from balancing the up and down effect of the static head pressures. This means that such a valve must be installed at a point where the system pressure is above atmospheric pressure. This requires calculations on systems installed on roofs of multi-story buildings. In such cases, the

APPENDIX A

TEMPERATURE/INSOLATION CORRECTION NOMOGRAPHS

INTRODUCTION

Originally, FSEC collector output rating was not envisioned as a system sizing tool It was developed for the purpose of giving a comparative ranking to different solar collectors That ranking is determined by collector output calculated under a standard set of insolation and temperature conditions

However, in the absence of a better sizing tool, it can be adapted to predict the low temperature performance of specific collectors under a variety of insolation and temperature conditions. The adaptation developed will yield reasonabley accurate results if the collector inlet temperature remains relatively constant throughout the period of use for which the system is designed, and if the temperature rise through the collector is small Fortunately, those criteria usually are met by commercial swimming pools and spas A combination of solar and conventionally fired backup heaters is used to maintain their temperature at some predetermined value -- often 78°-80°F in the case of swimming pools

IDENTIFICATION OF NOMOGRAPHS

Figures A.1 through A.6 may be used to modify FSEC low-temperature ratings for unglazed collectors to reflect a variety of insolation and temperature conditions

Figures A.8 through A.13 may be used to modify the FSEC low-temperature ratings for glazed collectors to accomplish the same pur-

pose In both cases the low-temperature rating is entered on the vertical axis of the nomograph that has the appropriate Δt designation, a horizontal line is drawn to the appropriate insolation reference diagonal, the corrected rating is read from the intersection of the horizontal axis and a vertical line from the first reference point Figures A.5, A.12 and A.13 contain arrows and dotted lines which identify paths through those nomographs

A.2 DEVELOPMENTAL METHODOLOGY

The method for evaluating collector output for each of the ten increments assigned to a Florida standard day (See Table 5.2, Page 5 described in detail in FSEC GP 6-80 During the development of nomographs, the ten hourly increments were fitted with new temperature (and subsequently insolation) profiles New fluid paramaters were developed for each hour under a matrix of the following conditions collector inlet temperature, 95°F; Daily average Δt (t_i t_a)—(°F): 5, 14, 25, 35, 45, 55; insolation rates (Btu/ft^{2}day) 1000, 1200, 1400, 1600, 1800, 2000 The fractional incremental temperature and insolation variations in Table 5.2, Page 5-8 were applied to the appropriate daily mean values

In developing nomographs for unglazed collectors, performance ratings were developed for each of the eight unglazed collectors most widely used in Florida. The collectors are those constructed of plastic sheet, or metal deck and tube, or EPDM rubber. Using each combination of conditions in the matrix, the new ratings were plotted against original low-temperature ratings in the form of a linear regression (least squares fit) line This was accomplished by the considerable efforts of FSEC's James Huggins, and Gerald Land, using a PDP 11/34 computer

same process was followed to generate the correction nomographs for glazed collectors In this case, the thermal performance equations of more than 300 glazed collectors were used to obtain the reference points

In a departure from the "Standard Day" FSEC rating procedure first order ASHRAE performance equations were used rather than second order National Bureau of Standards equations Under the low temperature conditions encountered in pool and spa heating applications differences between the two are of academic rather than real interest

Standard deviations from the mean are given in Table A.1 The point distribution pattern for $\Delta T = 35°F$ and insolation rates of 800-2000 $Btu/ft^2 \cdot day$ for the eight unglazed collectors is shown in Figure A.7 That for $\Delta T = 35°F$, insolation rate = 1600 $Btu/ft^2 \cdot day$ for glazed collectors is shown in Figure A.14

a higher degree of accuracy, some designers may wish to generate a table of values corresponding to the insolation/temperature matrix (Table 5.2) for specific collectors. The described methodology and a programmable calculator may be used to accomplish such a task It is recommended that FSEC GP 6-80 be consulted to clarify the energy summation methodology

Table A.1
Standard Deviations from Mean (Btu/ft^2·day)
for Temperature/Insolation Correction Nomographs

Unglazed Collectors
Insolation Rates (Btu/ft^2·day)

$\frac{\Delta T}{(^\circ F}$	1000	1200	1400	1600	1800	2000
55	output = 0	17.0	16.0	15.5	15.3	13.7
45	18.6	17.4	15.0	13.8	12.6	11.2
35	15.9	13.4	12.2	10.4	9.1	8.0
25	11.4	9.4	7.8	5.7	5.1	3.9
14	3.9	2.6	1.0	0.0	1.1	2.0
5	5.9	6.8	6.6	7.2	7.7	8.1

Glazed Collectors
Insolation Rates (Btu/ft^2·day)

$\frac{\Delta T}{(^\circ F)}$	1000	1200	1400	1600	1800	2000
55	76.2	69.2	63.4	58.1	63.4	53.5
45	68.0	61.1	54.9	49.8	44.9	40.3
35	57.6	50.4	44.2	38.4	33.4	29.0
25	42.8	35.1	28.6	23.3	18.4	14.0
14	17.4	10.4	4.6	0.0	3.9	7.1
5	19.5	22.3	24.4	25.9	27.0	28.1

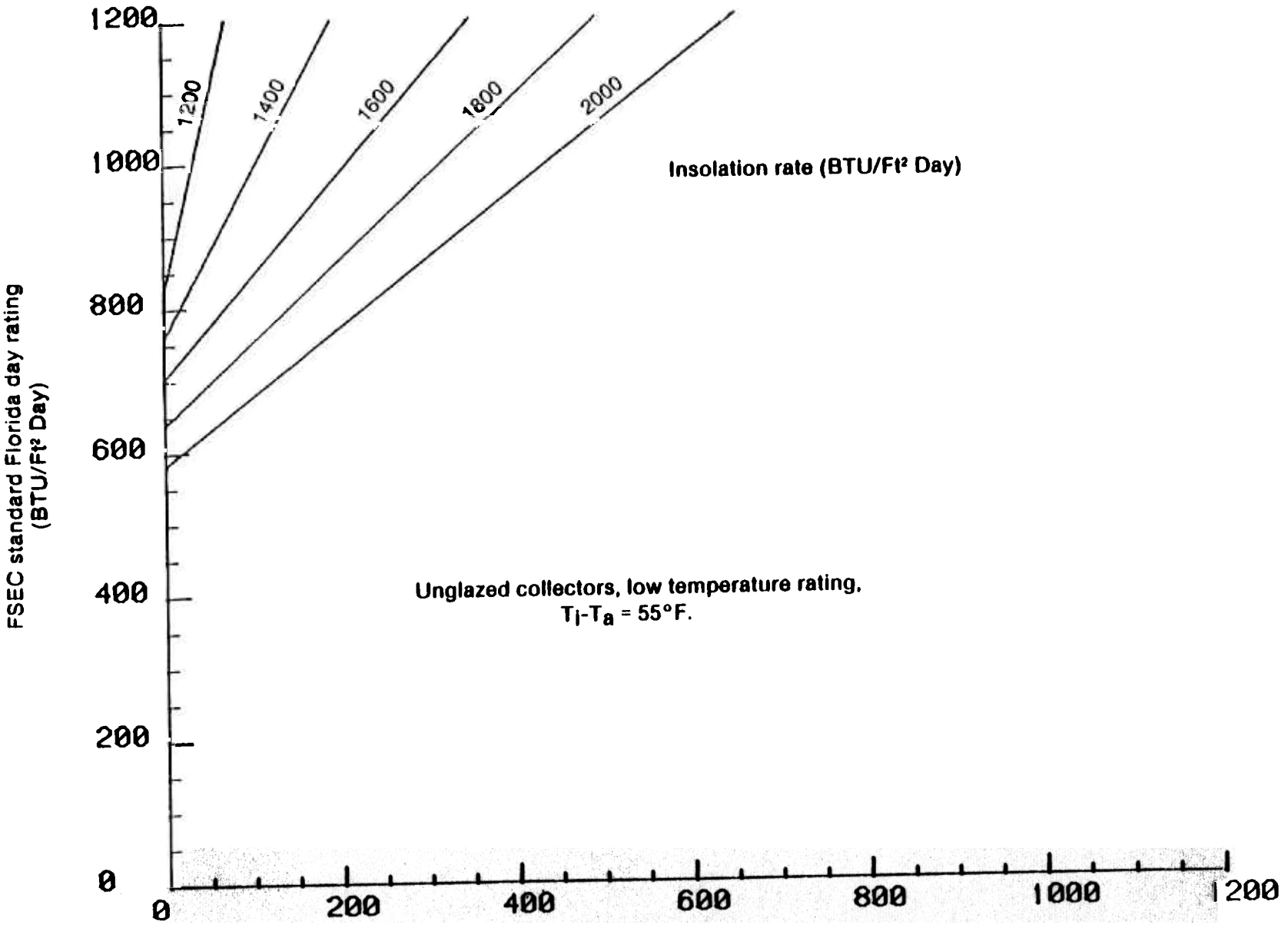

Temperature/insolation correction graph

Figure A.1

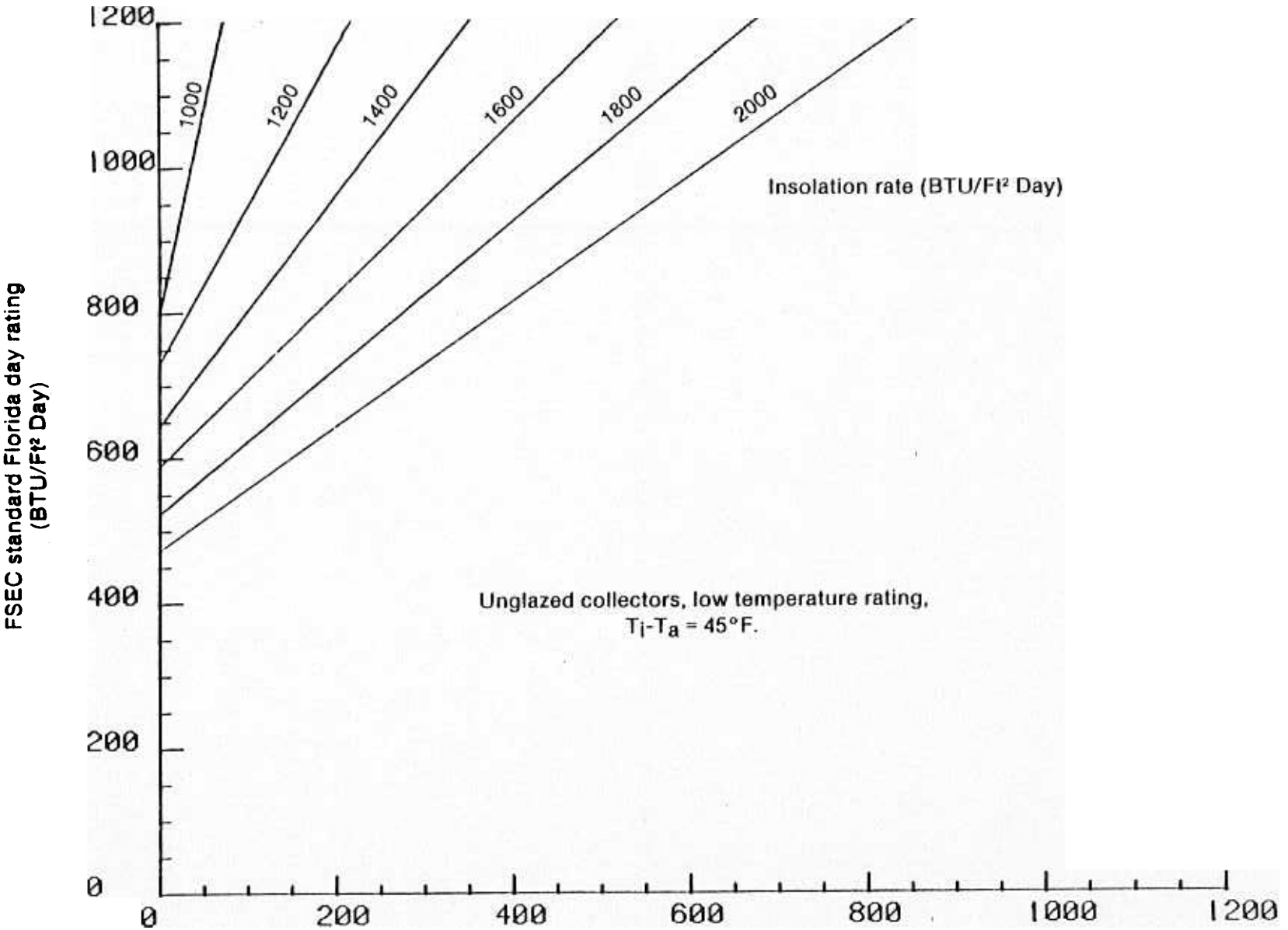

Temperature/insolation correction graph
Figure A.2

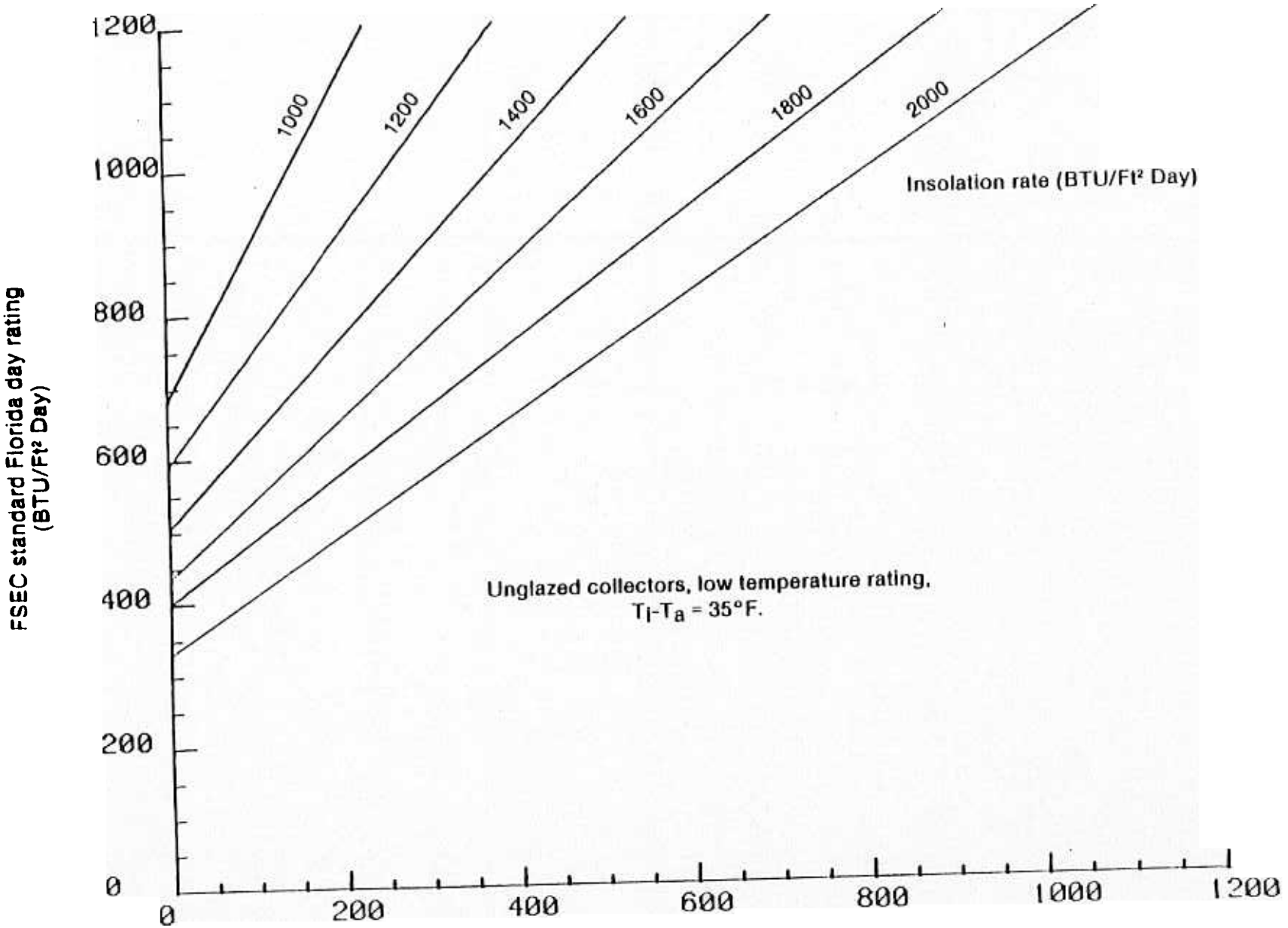

Temperature/insolation correction graph

Figure A.3

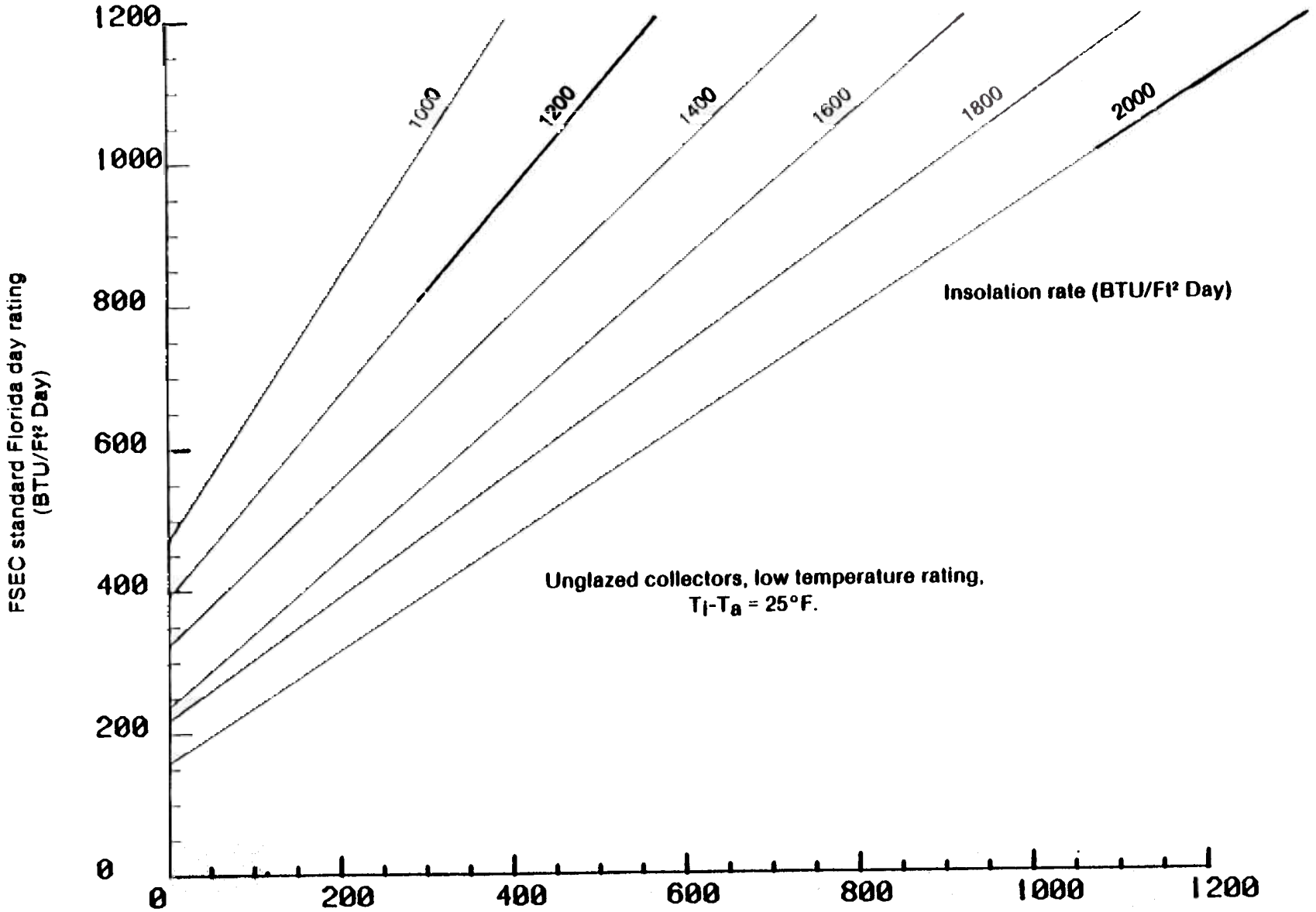

Temperature/insolation correction graph
Figure A.4

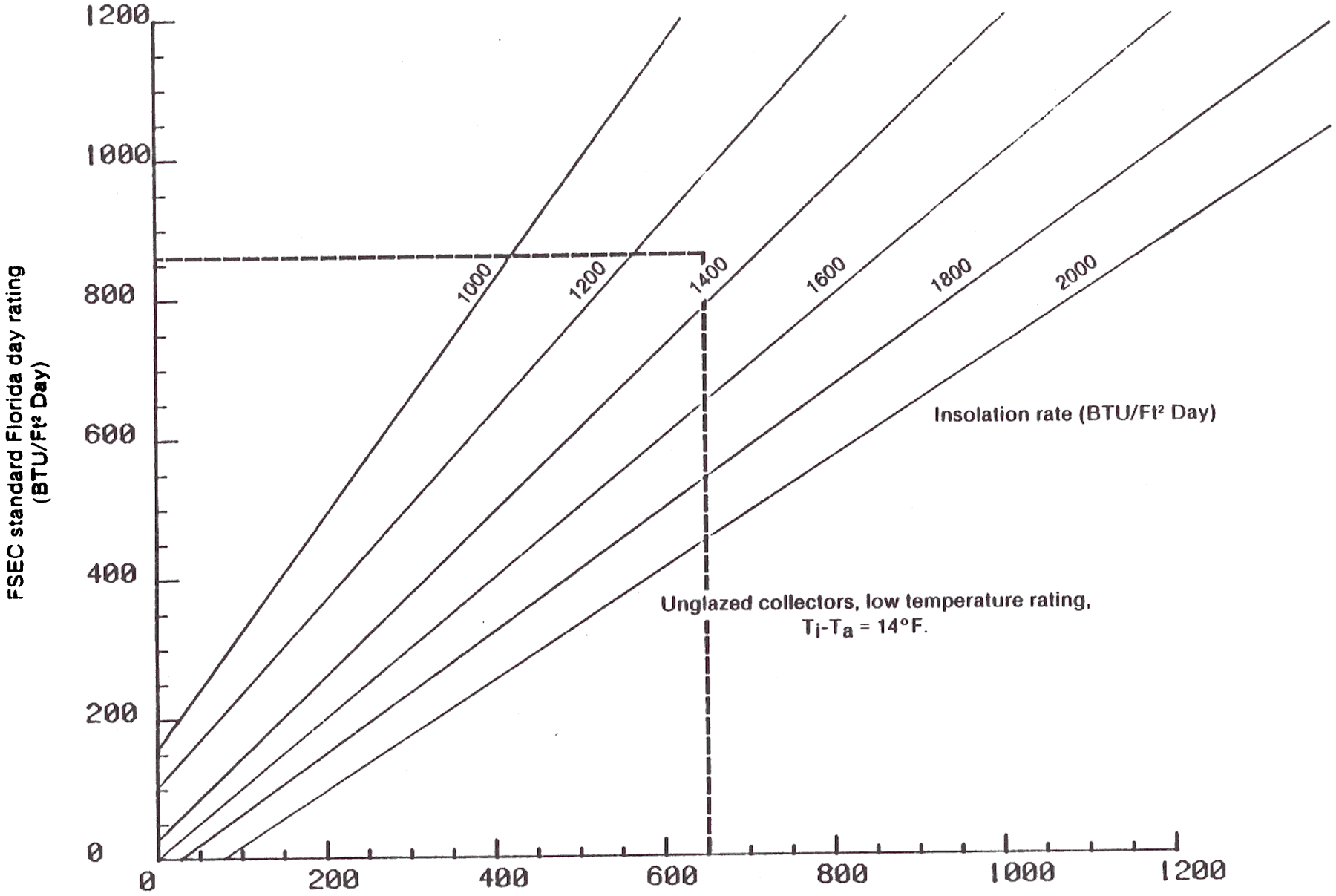

Temperature/insolation correction graph
Figure A.5

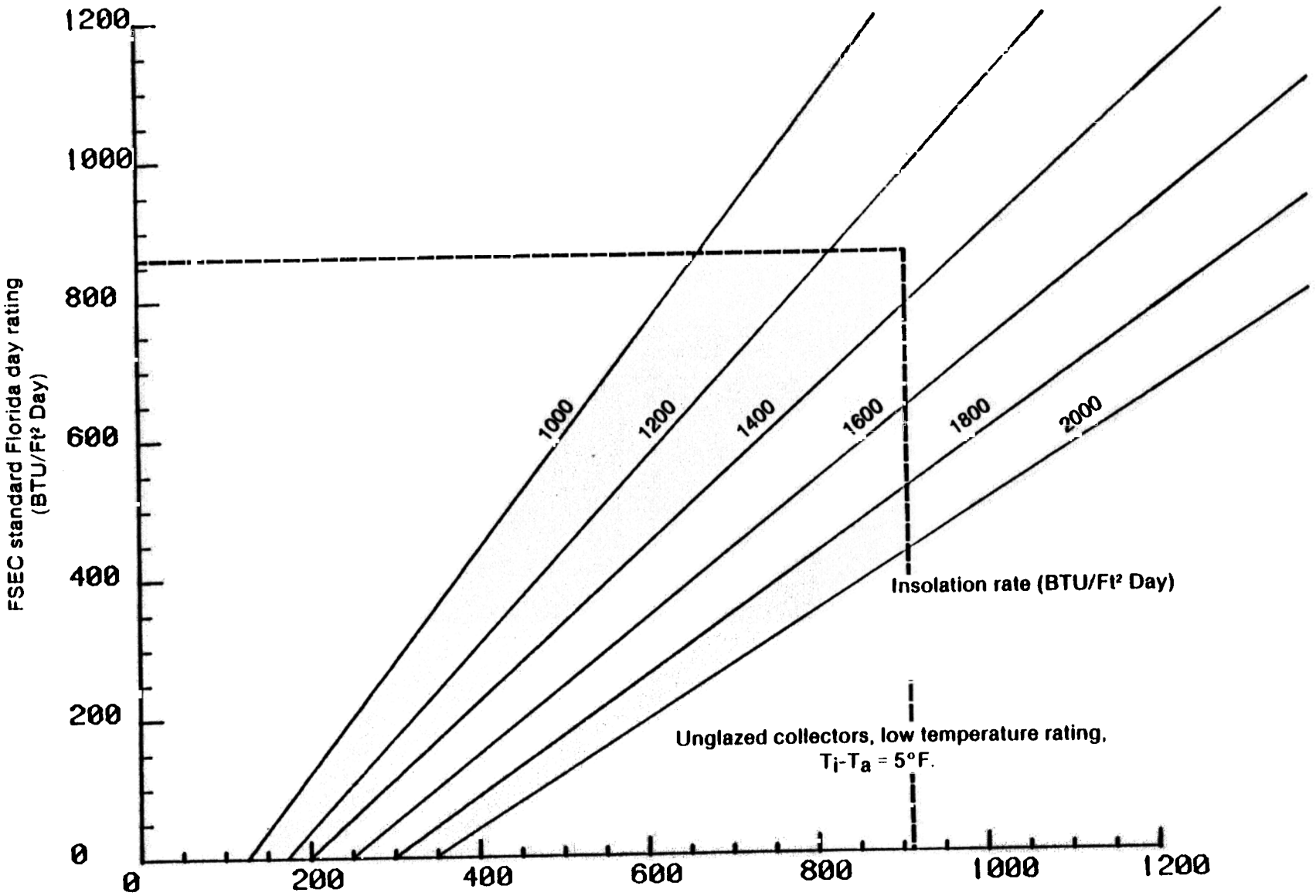

Temperature/insolation correction graph

Figure A.6

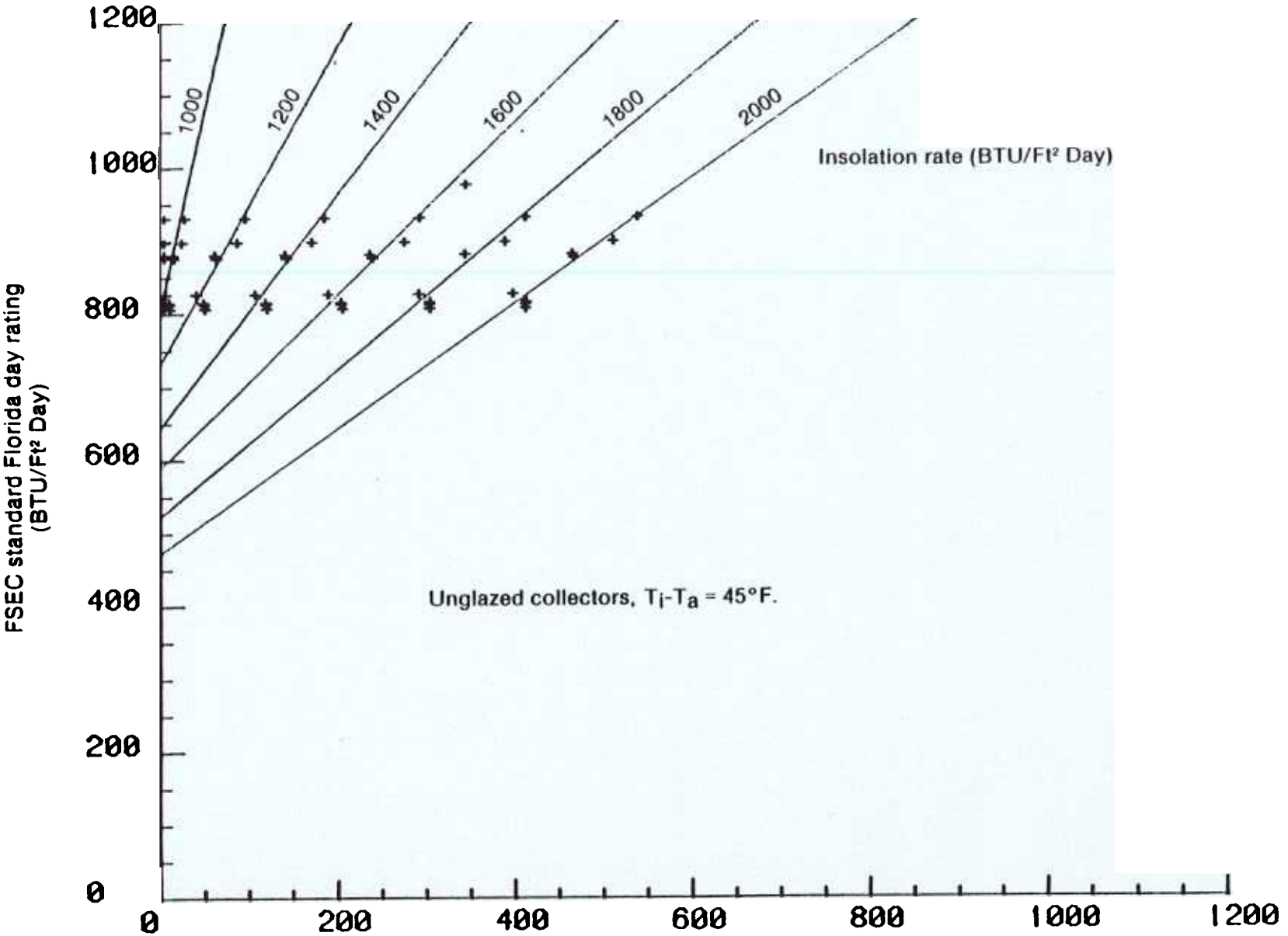

Temperature/insolation correction graph
Typical point spread for unglazed collector rerating
(low temperature operation)

Figure A.7

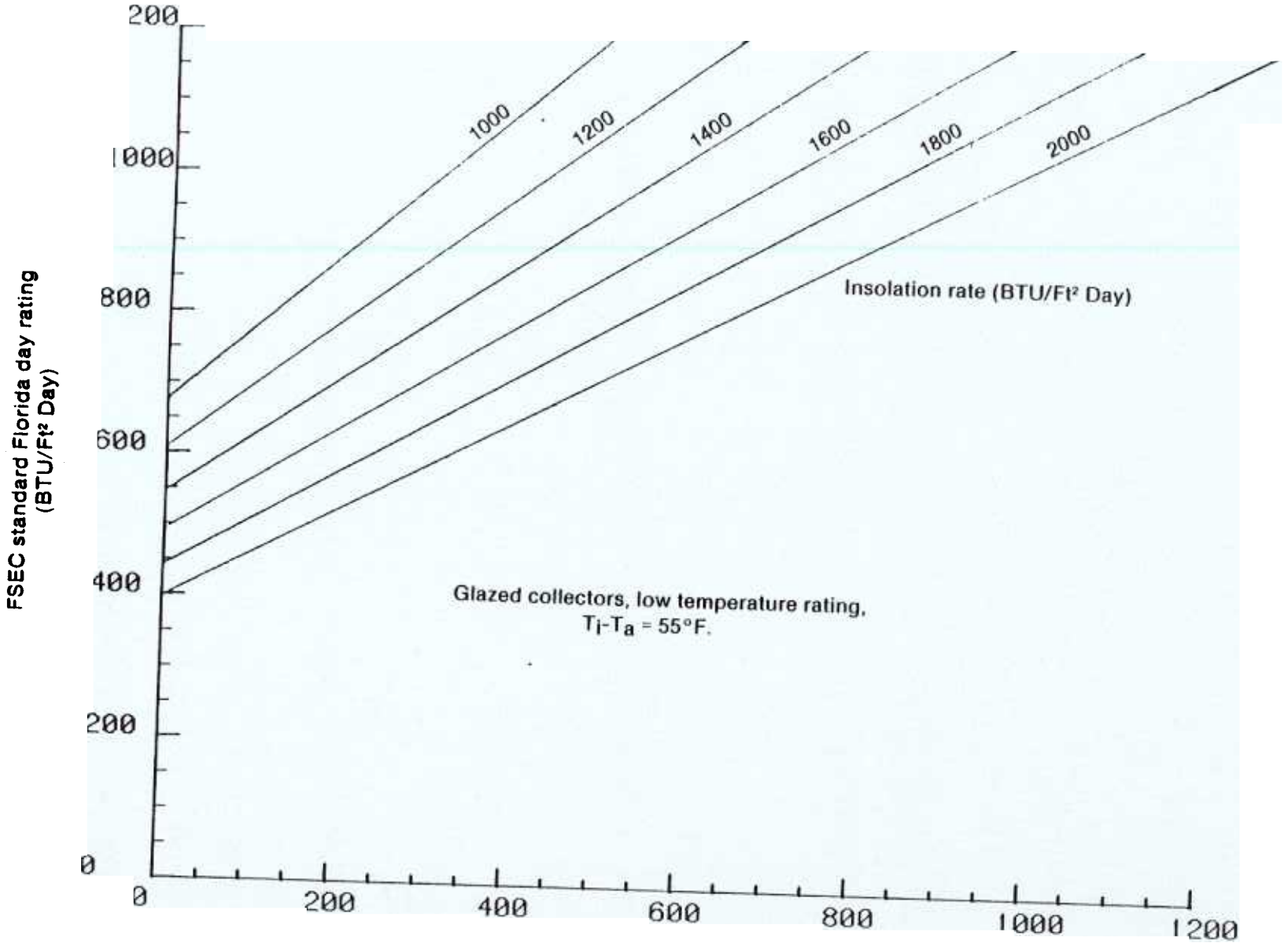

Temperature/insolation correction graph
Figure A.8

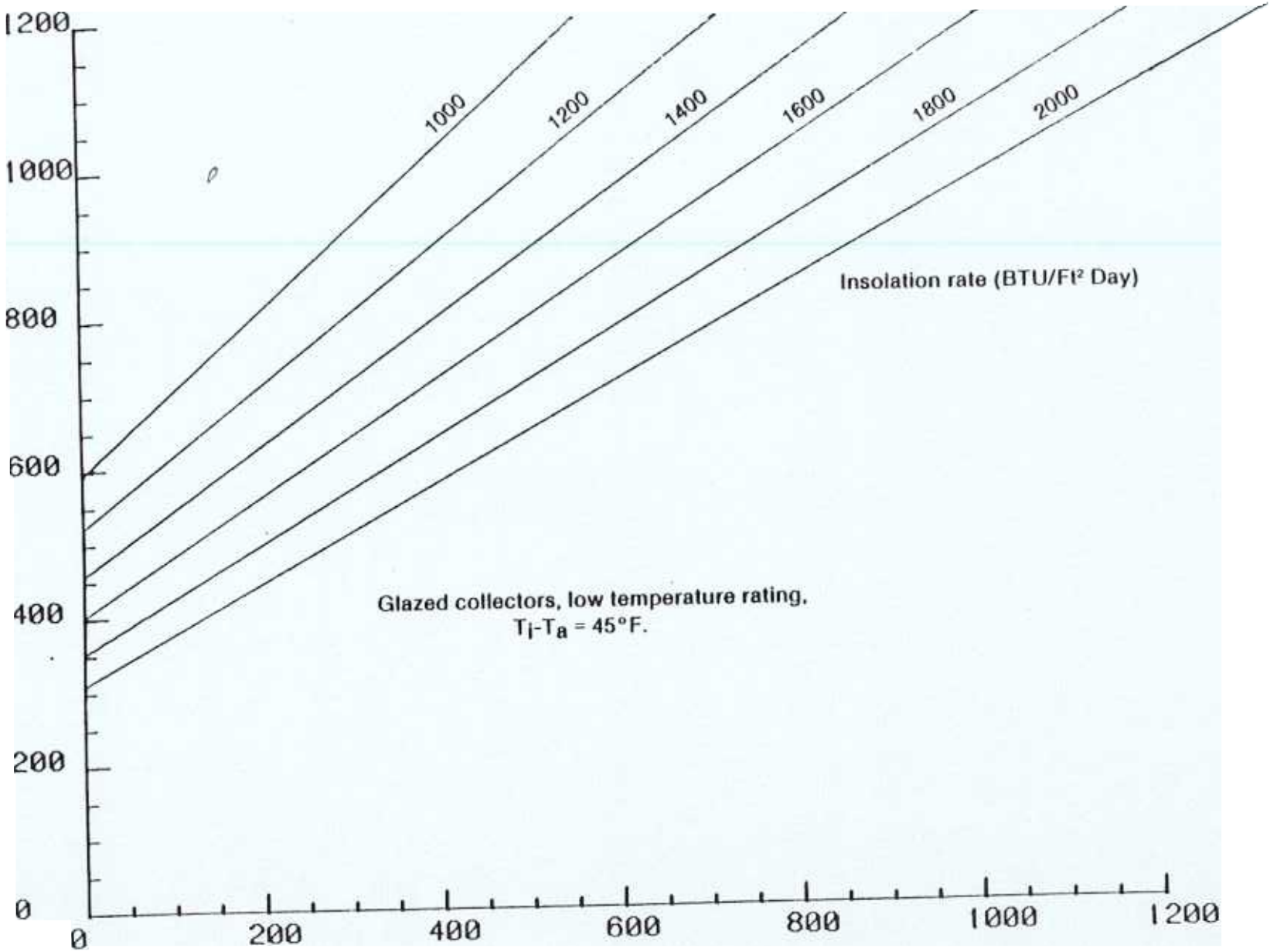

Temperature/insolation correction graph

Figure A.9

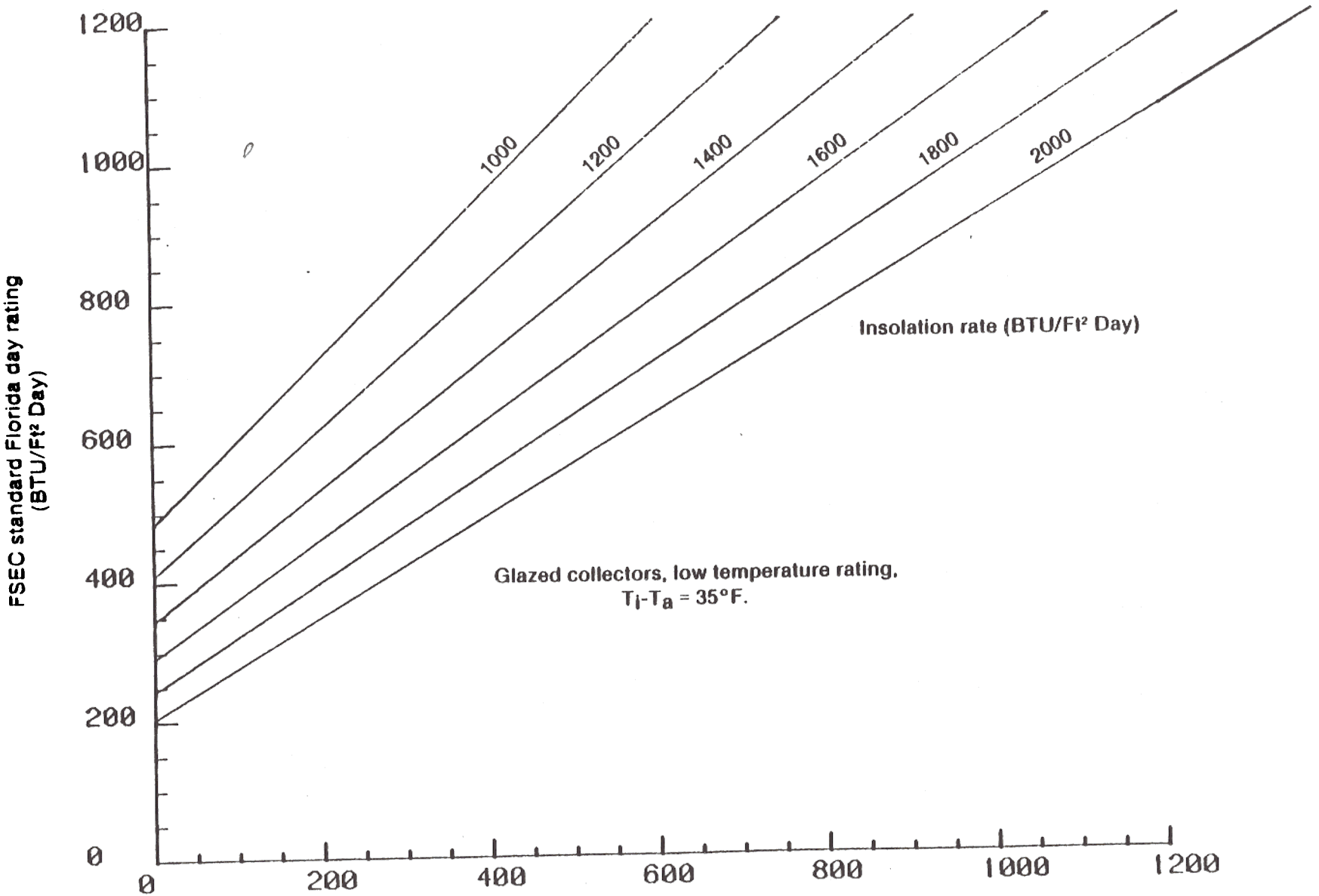

Temperature/insolation correction graph
Figure A.10

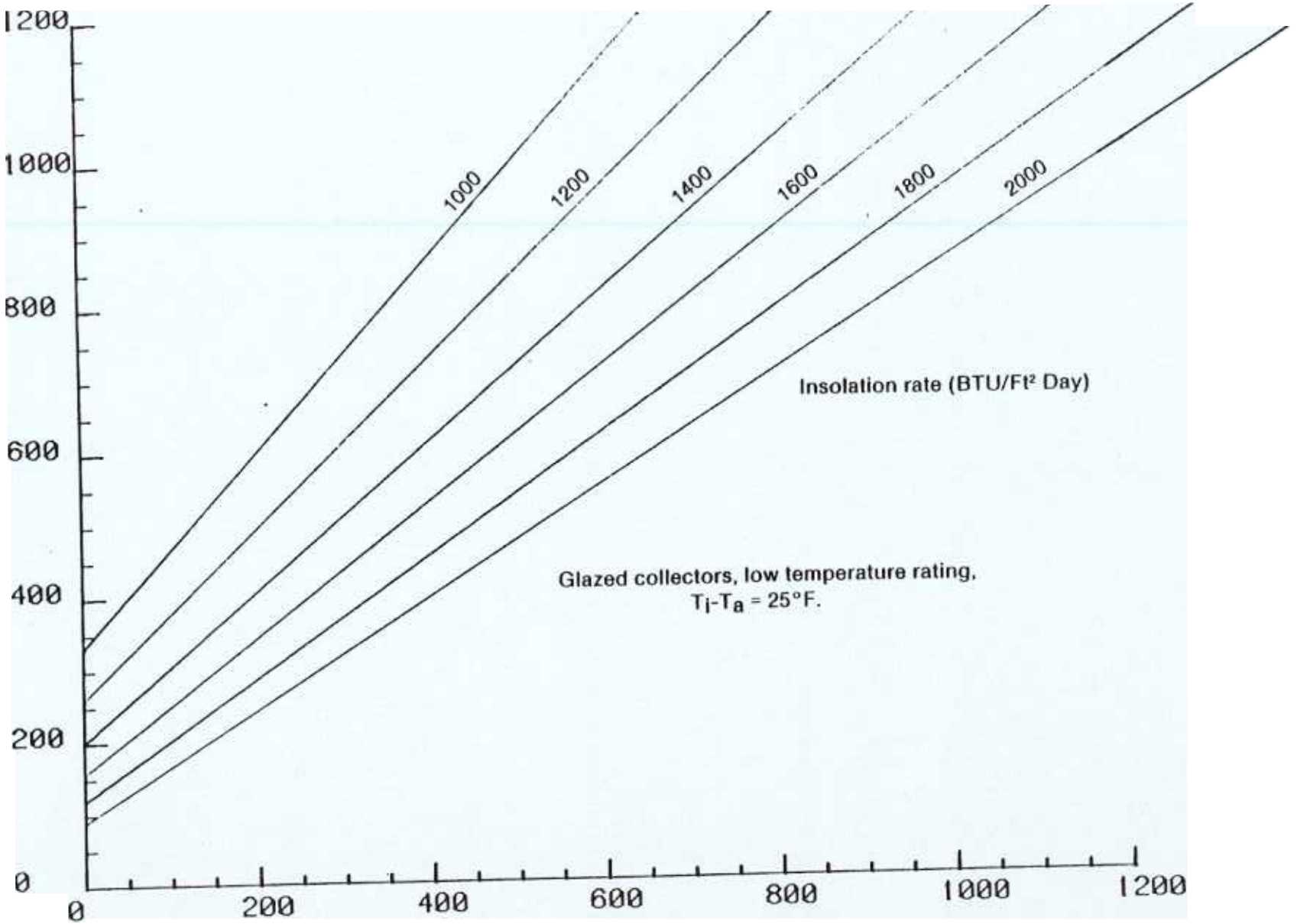

Temperature/insolation correction graph
Figure A.11

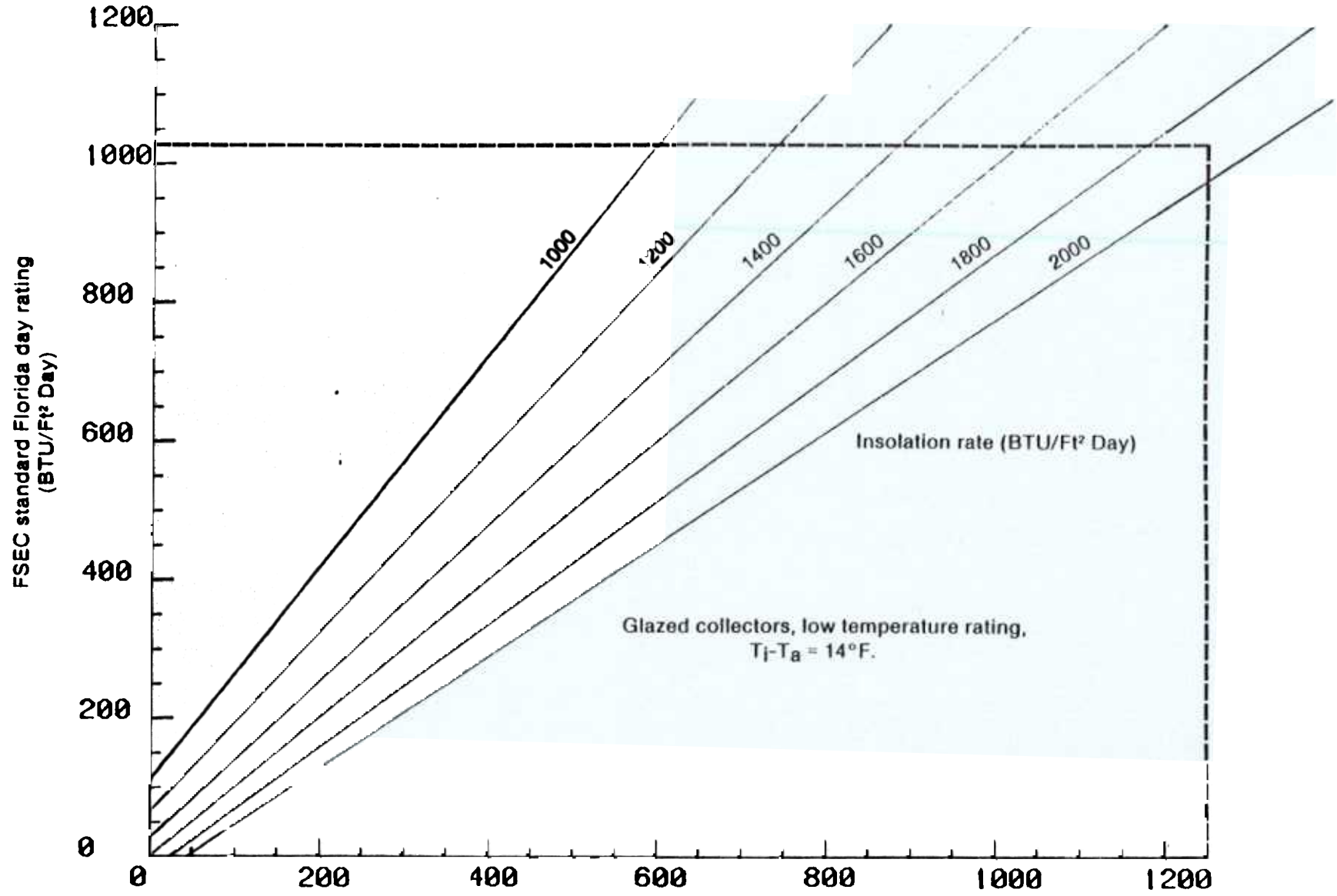

Temperature/insolation correction graph
Figure A.12

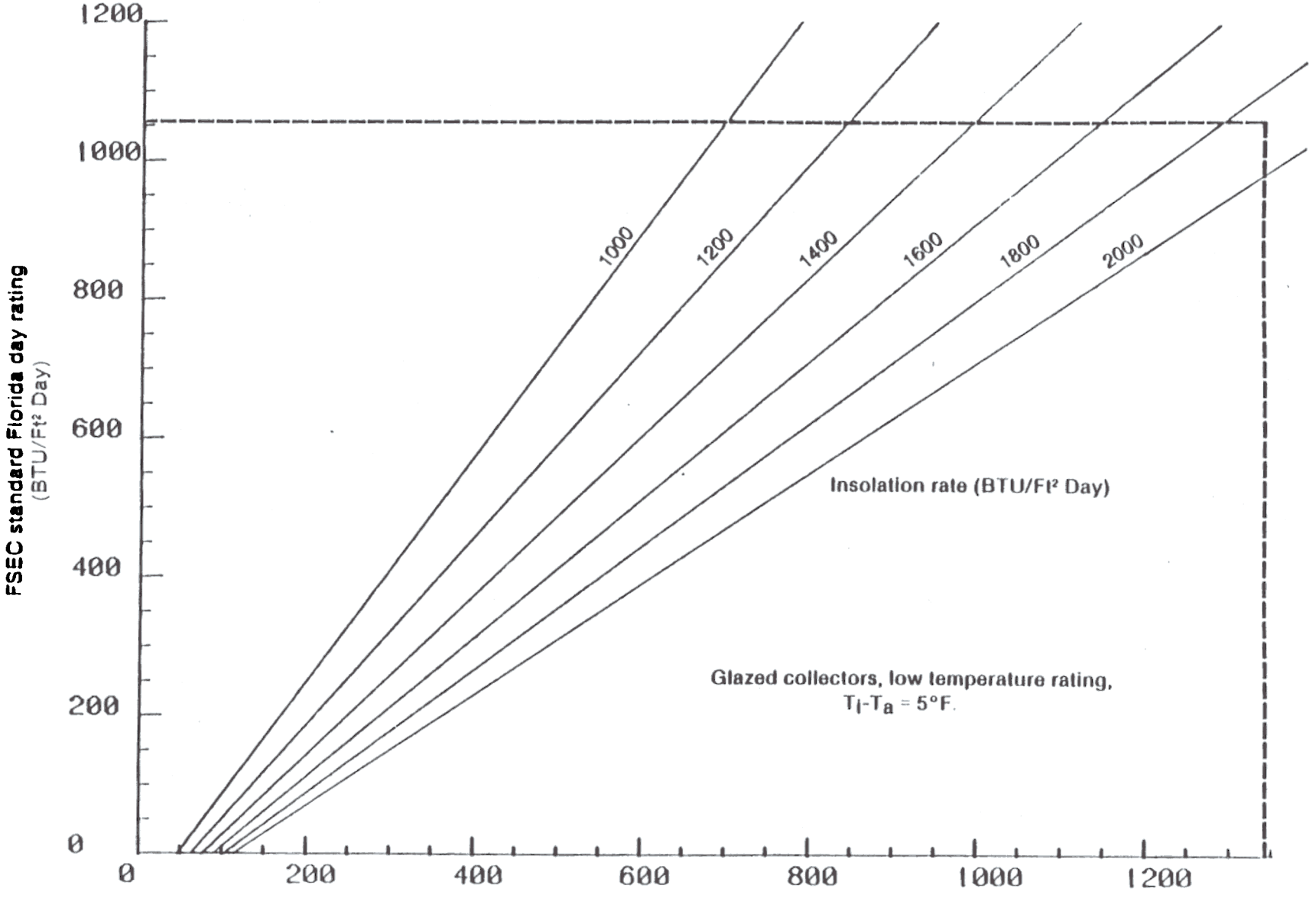

Temperature/insolation correction graph

Figure A.13

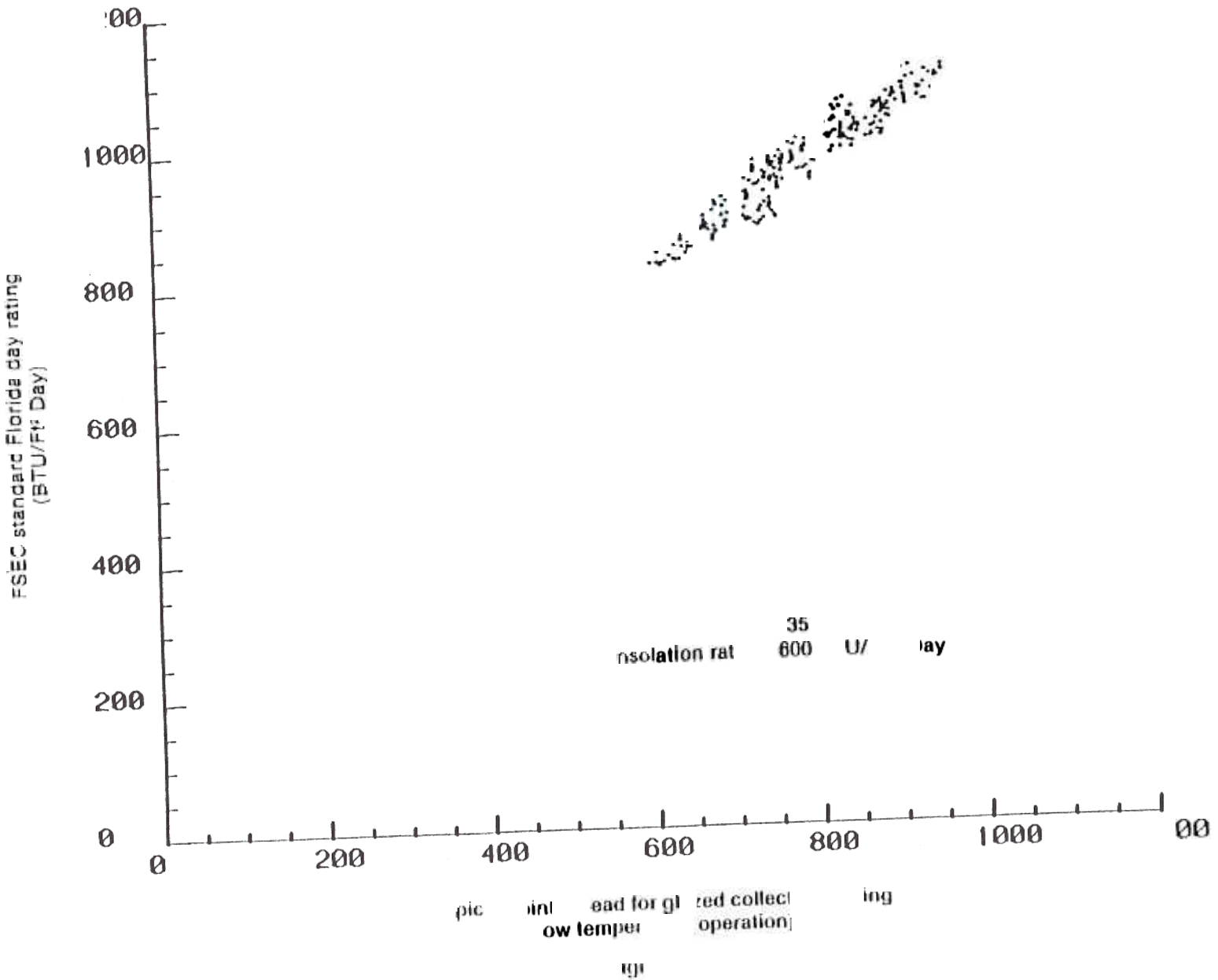
FSEC standard Florida day rating
(BTU/Ft² Day)
1000
800
600
400
200
0
0
200
400
600
800
1000
00
35
600
U/
ay
ow temper
operation)
ing

APPENDIX B

WIND SPEED MODIFICATION DEVELOPMENT METHODOLOGY

B.0 INITIAL ASSUMPTIONS

By definition, the "y" intercept of an unglazed collector's performance curve (Figure B.1) is considered to represent the following operating conditions:

1 Average collector temperature ≅ average air temperature

2 All collector heat gain is from solar radiation

3. Virtually all heat loss may be attributed to reradiation or reflection losses.

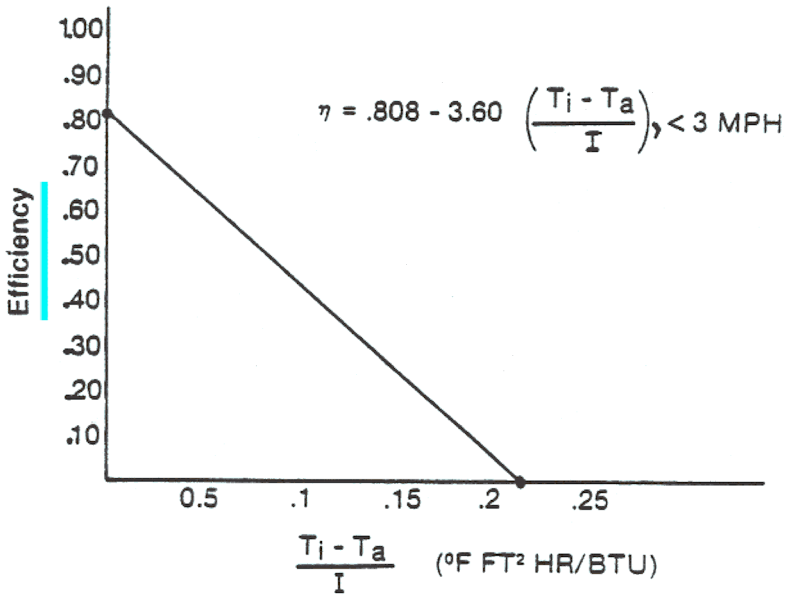

Figure B.1

Typical Unglazed Collector Performance Curve

B.1 CALCULATION OF LOSSES AT "Y" INTERCEPT

Using these assumptions and ASHRAE 96-80 test performance results for a given collector, we may evaluate the magnitude of the radiation and reflection losses for that collector under "y" intercept conditions

Table B presents averaged test conditions and results for unglazed plastic and flexible mat collectors in widespread use at the end of September 1983 The numbers are adjusted slightly to make it easier for the reader to follow the calculations

TABLE B.1

Averaged Test Conditions (English Engineering Units)

1) composite first order efficiency equation:

$$\text{collector decimal efficiency} = .808 - 3.60 \frac{t_i - t_a}{I}$$

2) insolation rate: 300 Btu/ft^2·hr
3) solar absorptance: 0.9
4) temperature rise across collector 4°F
5) total loss (at "y" intercept): 192 x insolation
6) assumed reflectance: 10 x insolation
7) radiation loss (at "y" intercept): 092 x insolation
8) ambient temp ≅ inlet temp = 90°F
9) average collector temperature = 90°F + 4°F/2 = 92°F

o The radiation loss may be calculated from Table B.1, item 7

$$300 \times .092 = 27.6 \text{ Btu/ft}^2\text{·hr}$$

- The effective sky temperature may be estimated from an accepted radiant heat exchange formula

$$Q_{reradiation} = .1714 \times A \times \varepsilon \left[\left(\frac{t_{coll}}{100} \right)^4 - \left(\frac{t_{sky}}{100} \right)^4 \right]$$

Substituting the known values

$$1714 \times 1 \times 9 \left(\frac{92+460}{100} \right)^4 \qquad \left(\frac{t_{sky}}{100} \right)^4$$

$$.1543 \quad 928.5 - \left(\frac{t_{sky}}{100} \right)^4$$

$$1543 \left(\frac{t_{sky}}{100} \right)^4 = 143 - 27.6$$

$$t_{sky} = 100 \times \sqrt[4]{\frac{115.4}{.1543}}$$

$$= 523°R = 64°F$$

- This sky temperature may be used in combination with information from the collector's performance curve to evaluate reflection and reradiation losses from the collector at other fluid parameters -- for example, at .05 and .1 (English Engineering Units). That having done, convection losses may be calculated for the same fluid parameter values using the formula

$$Q_{cv} = h_{cv} \times A \times \Delta T$$

- New values for h_{cv} (accurate enough for these calculations) for increased wind speeds may be developed using the formula:

h_{cv} 1 + .3 x wind speed (in mph)

- The new h_{cv} values may be used to calculate convective losses at wind speeds higher than 3 mph and at specific fluid parameters (say .05 and 1). The losses may be totaled and new efficiency curves and equations generated for 5-, 10- and 15-mph wind speeds It should be remembered that the wind speeds must be those which occur across the surface of the unglazed collector array if the new curves and equations are to yield useful results. (The 5, 10 and 15 mph efficiency curves and their corresponding first order efficiency equations were used in an FSEC program for a PDP 11/34 computer to generate the nomograph which appears as Figure 5.3 on page 5.11

CALCULATION OF LOSSES AT OTHER FLUID PARAMETERS

During testing to ASHRAE 96-80 specifications, it is usually easier to raise the inlet temperature of liquid entering the collector undergoing test than it is to lower the ambient air temperature Establishment of a data point corresponding to a fluid parameter of 05, an ambient temperature of 90°F, and an insolation rate of 300 Btu/ft²·hr would require a fluid inlet temperature of:

$$05 \quad \frac{t_i - 90}{300}; \; t_i = 105°F$$

Under actual pool heating conditions this could correspond to an insolation rate of 300 Btu/ft²·hr, a pool temperature (assumed to be the collector inlet temperature) of 85°F, and an ambient temperature of 70°F (This is characteristic of daytime, winter conditions in much of the Sunbelt. It also could correspond to a spa temperature of 100°F and an air temperature of 85°F at an insolation rate of 300 Btu/ft²·hr

The total osses at the 05 point on the performance curve are

$(1.00-.628) \times 300 = 111.6$ Btu/ft^2·hr

(Efficiency at .05 = .808-(.05 x 3.60) = .628)

- The average temperature of the collector surface is approximately:

105°F (inlet temp) + $\frac{4°F}{2}$ (temp rise) or 107°F

- Thus, the reradiation loss may be approximated as

$$Q_{rerad} = .1714 \times 1 \times .90\ (1034 - 748) = 44 \text{ Btu/ft}^2\cdot\text{hr}$$

- The convective loss at 3 mph is:

$Q_{cv} = h_{cv} \times A \times \Delta t$; wind speed = 3 mph

$Q_{cv} = (1 + .3 \times 3) \times 1 \times (107 - 90) = 32$ Btu/ft^2·hr

- We now may calculate the conduction loss at a fluid parameter of .05 by using a heat balance

$Q_{fluid} + Q_{reflect} + Q_{rerad} + Q_{conv} + Q_{cond} = Q_{rad}$

$Q_{cond} = 300 - (.628 \times 300 + .1 \times 300 + 44 + 32)$

$Q_{cond} = 6$ Btu/ft^2·hr

- Employing the formula $h_{cv} = 1. + .3 \times$ wind speed (mph) we may calculate the convective losses to be expected at a fluid parameter of 05 and wind speeds of

5 mph; $h_{cv} = 1 + .3 \times 5 = 2.5$

10 mph $h_{cv} = 1 + 3 \times 10 = 4.0$

15 mph $h_{cv} = 1 + .3 \times 15 = 5.5$

By ratio $_{cv}$ =

at 5 mph; $32 \times \frac{2.5}{1.9} = 42$ Btu/ft^2·hr

at 10 mph; $32 \times \frac{4.0}{1.9} = 67$ Btu/ft^2·hr

at 15 mph; $32 \times \frac{5.5}{1.9} = 93$ Btu/ft^2·hr

Total losses at 5 mph are:
44 (rerad) + 30 (reflect.) + 6 (cond.) + 42 (conv.) = 122 Btu/ft^2·hr

Total losses at 10 mph are:
44 (rerad) + 30 (reflect.) + 6 (cond.) + 67 (conv.) = 147 Btu/ft^2·hr

Total losses at 15 mph are:
44 (rerad) + 30 (reflect.) + 6 (cond.) + 93 (conv.) = 173 Btu/ft^2·hr

Table B. gives fractional losses and corresponding collector efficiencies for a fluid parameter of 05 (for the collector in Figure B.1)

The convective losses at increased wind speed may be added to the reflective, reradiative and conductive losses at a fluid parameter point of .05 and a new efficiency value derived that is substantially correct.

TABLE B.2

Calculated Collector Efficiencies with Fluid Parameter of .05

Wind Speed	Fractional Loss	Collector Efficiency
5	$\frac{122}{300} = 41$	1 - .41 = 59
10	$\frac{147}{300} = .49$	1 - 49 = 51
15	$\frac{173}{300} = 58$	1 - .58 = 42

The process may be repeated for a fluid parameter of 10

10 300 = t_i - 90

120° = t_i

The efficiency at a fluid parameter of 10 is 448

Total losses ar

$$(1 - 448) \times 300 = 166 \text{ Btu/ft}^2 \text{ hr}$$

temperature rise across the surface is slightly less (only about 2°F) because the quantity of energy absorbed at the lower collector efficiency corresponding to a fluid parameter of .1 is about half that absorbed at the "y" intercept point but the rate of fluid flow has remained constant. Thus, the average collector temperature is 121°F.

One set of operating conditions corresponding to this test point is a pool temperatur of 85°F and an ambient temperature of 55°F

- Reradiation losses may be approximated as:

$$Q_{rad} = .1714 \times 1 \times .9\left[\left(\frac{121 + 460}{100}\right)^4 - \left(\frac{64+460}{100}\right)^4\right] = 1543 \times 386$$

$$= 60 \text{ Btu/ft}^2\cdot\text{hr}$$

- The convective loss at 3 mph is:

$$= h_{cv} \times A \times \Delta t; \text{ wind speed 3 mph}$$

$$= (1 + .3 \times 3) \times 1 \times (121-90)$$

$$= 59 \text{ Btu/ft}^2\cdot\text{hr}$$

- A heat balance establishes the conductive loss as

$$Q_{cond} = 300 - (.448 \times 300 - .1 \times 300 + 60 + 59)$$

$$Q_{cond} = 17 \text{ Btu/ft}^2\cdot\text{hr}$$

- Again the convective loss may be ratioed to bring it into correspondence with:

5 mph; $59 \times \frac{2.5}{1.9} = 78$ Btu/ft²·hr

10 mph; $59 \times \frac{4.0}{1.9} = 124$ Btu/ft²·hr

10 mph; $59 \times \frac{5.5}{1.9} = 171$ Btu/ft²·hr

The total losses are

5 mph; 60 + 30 + 17 + 78 = 185 Btu/ft^2·hr

10 mph; 60 + 30 + 17 + 124 = 231 Btu/ft^2·hr

15 mph; 60 + 30 + 17 + 171 = 278 Btu/ft^2·hr

Table B gives fractional losses and corresponding collector efficiencies for a fluid parameter of .1 (for the collector in Figure B.1

B.3 TABULATION OF DERIVED EFFICIENCIES

TABLE B.3

Calculated Collector Efficiencies with Fluid Parameter of

Wind Speed	Fractional Loss	Collector Efficiency
5	$\frac{185}{300}$ = .62	1 - .62 = 38
10	$\frac{231}{300}$ = .77	1 - .77 = 23
15	$\frac{278}{300}$ = 93	1 -.93 = 07

Figure 5.2 (page 5-10) presents 3, 5, 10 and 15 mph performance curves for the composite collector performance curve represented by Figure B.1 (page B-1) It is a plot of the values from Tables B.2 and B.3 The slope correction factors in Table 5.3 are derived from Figure 5.2.

B.4 QUALIFICATIONS

In the preceding calculations, average static conditions have been assumed. In truth, heat transfer occurs under highly variable insolation, ambient temperature and surface wind speed conditions. For a high degree of accuracy, analysis should be based on the dynamic nature of operating conditions However, because of the unpredictability of

weather, approximate results derived from the static analysis often are accurate enough for solar pool heating design and installation

B.5 COMPARISON BETWEEN CALCULATED VALUES AND MEASURED RESULTS

Holbaugh and Huggins[1], of the Testing and Laboratories Division of FSEC have developed experimental data under Florida weather conditions for an unglazed plastic sheet collector whose ASHRAE 96-80 performance approximates that of the hypothetical collector the performance of which is represented by Figure B.1. Figure B.2 presents that emperical data

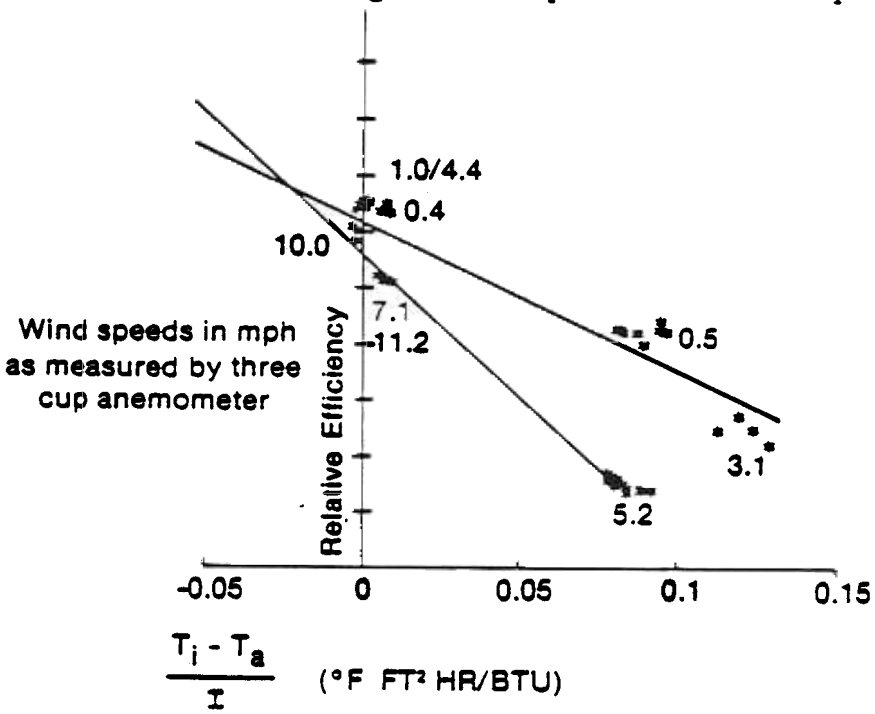

Figure B.2

Measured Variation of Unglazed Collector Performance with Wind Speed

Lumsdaine[2] has presented results of theorectical analysis and experimental testing of glazed flat-plate collectors (under conditions acceptable to

the ASHRAE 95-73 rating procedure) He presents convincing arguments that testing under varying wind conditions (1-10 mph), varying tilt angles, and varying ratios of diffuse to direct radiation can lead to fairly substantial discrepancies in comparative test results The magnitude of discrepancies caused by varying wind speeds is inversely related to the number of cover plates Figure B.3 is an adaption of his data for a flat-plate collector with no and with two cover plates

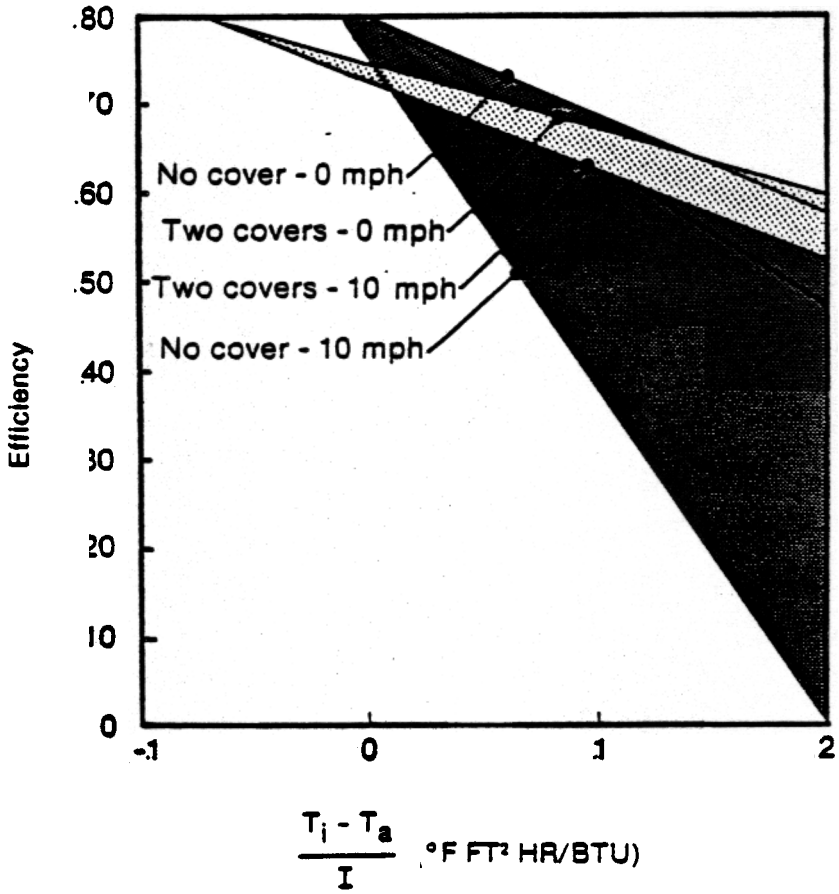

Figure B.3

Adaptation of Lumsdaine's Data

As shown by the data presented in Figure B.3, the effect of wind speed on unglazed collectors is substantial but that effect on glazed collec-

tors is of little consequence in the pool heating range of fluid parameters (less than about .1 in EE units)

It should be noted that the information presented in Figure B.3 may not be compared directly with that presented in Figures B.1 and B.2 The values were developed for different kinds of collectors

Jenkins and Reed[3] also have reported on the effect of wind speed on unglazed collectors. Figures B.4 and B.5 are reprinted from their report. Their findings agree with those reported by Holbaugh and Huggins, and with those reported by Lumsdaine

An examination of the figures discloses that wind speed effects both the slope of the performance curve and its y intercept. The increase in slope is translated into poor performance beyond certain windspeed/temperature limits. The decrease intercept has a far less dramatic impact on collector performance. The reasons are these: the decrease in intercept is only a few percent and is applicable only when the term

$$\frac{t_i - t_a}{I}$$

approaches 0 -- that is when unglazed collectors are operating at about ambient temperature. Under these weather conditions the collector performance is near its maximum level, windy or not. Additionally, under windy conditions collector efficiency actually improves if the air is warmer than the pool.

A comparison of Figure 5.2 with Figures B.2, .3, 4 and 5 shows acceptable agreement between calculated and measured curves for purposes of predicting windy weather performance of unglazed collectors in Florida

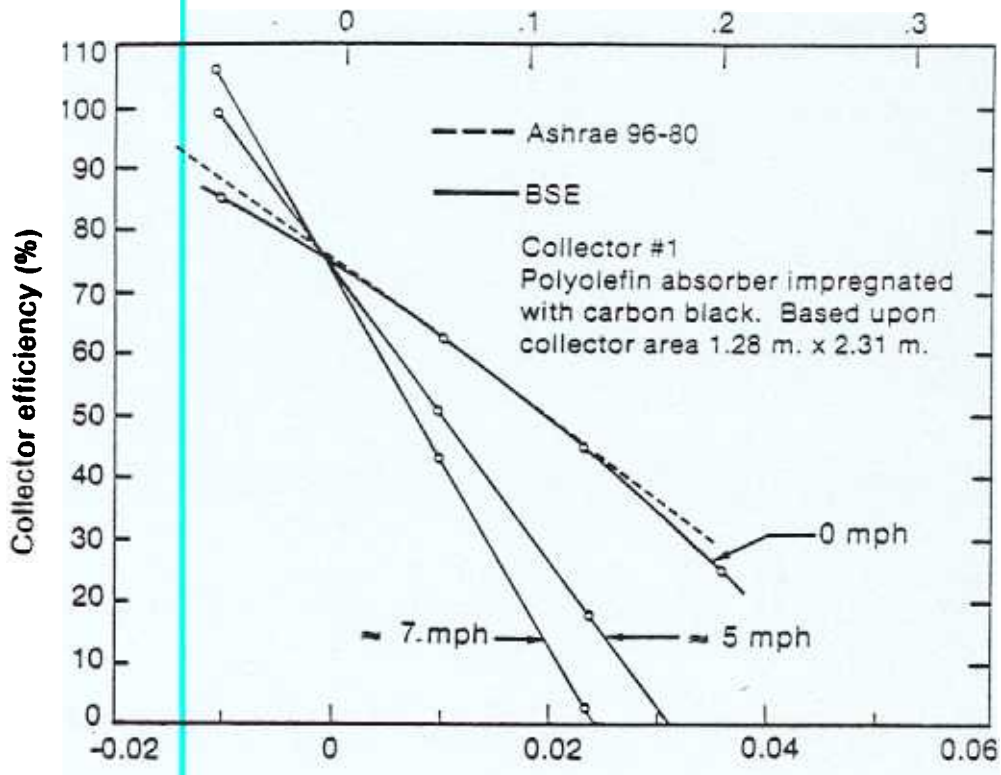

Figure B.4

Performance Curves: Unglazed Plastic

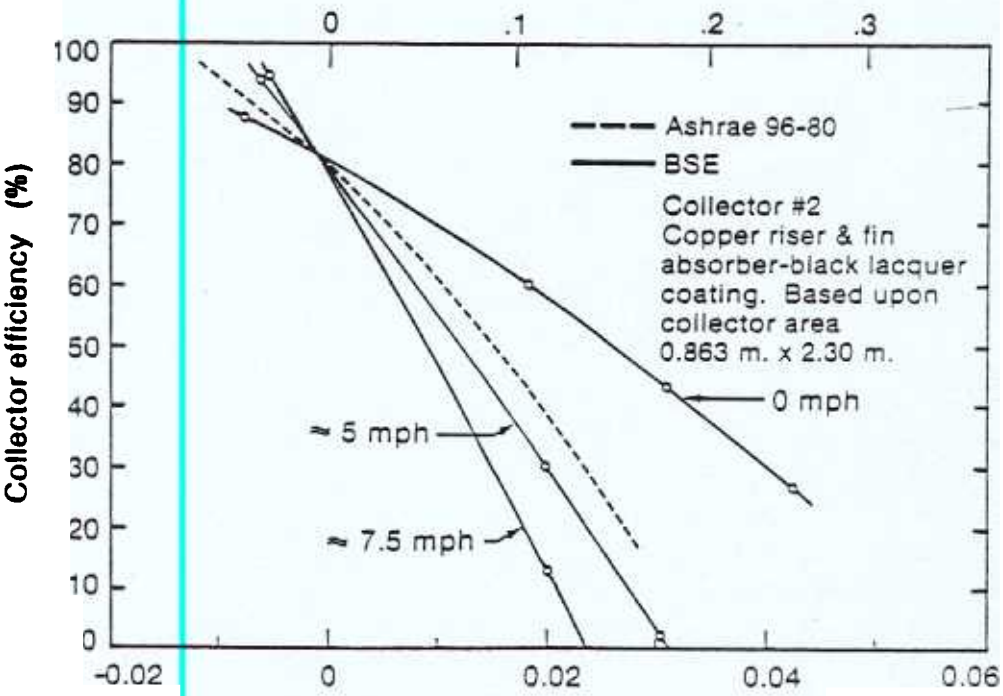

Figure B.5

Performance Curves: Unglazed Metal

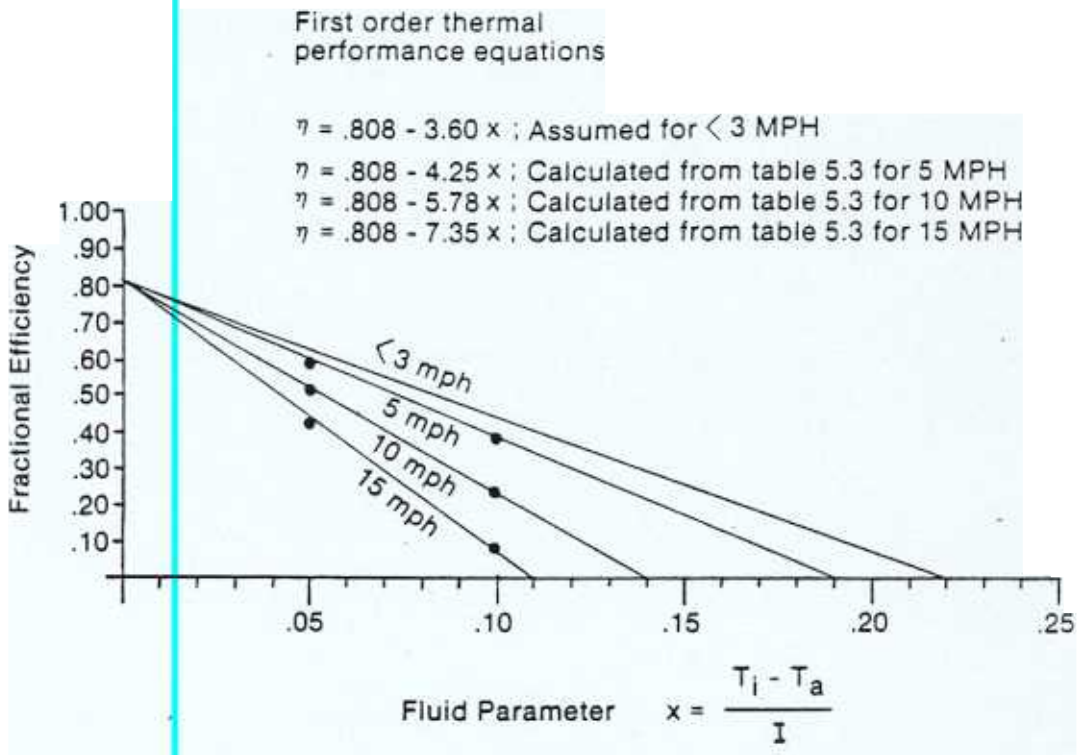

Figure 5.2

Modified Performance Graphs and Equations

(for unglazed collectors)

B.6 REFERENCES

1. Holbaugh and Huggins, Private Communication.
2. Lumsdaine, Edward, "On the Testing of Solar Collectors to Determine Thermal Performance", Proceedings of ISES Annual Conference, Denver, Co., June 1978.
3. Jenkins, John P. and Reed, Kent, A Comparison of Unglazed Flat Plate Liquid Solar Collector Thermal Performance Using ASHRAE Standard 96-1980
   NBSIR 82-2522, May 1982.

APPENDIX C

DETERMINING AND MINIMIZING WIND SPEED OVER COLLECTOR AND POOL SURFACES

INTRODUCTION

It is important to minimize the rate at which cool or cold ambient air flows over the surfaces of swimming pools, spas or unglazed solar collectors. This may be done by locating them in areas that are naturally protected from the wind or by building one or several wind screens if natural wind protection is not available Under either condition it is important for the solar designer or installer to estimate as accurately as possible the wind speeds likely to occur at the site during the pool heating season (which may not be concurrent with the design or installation period). The information in this appendix may be used to make the required estimates

AIRPORT WIND SPEEDS

Table C.1* gives average monthly wind speeds at 10 meter elevations (32.8 ft) at the airports near 12 Florida cities.

C.2 DIRECTION OF THE WIND

Figure C identifies prevailing monthly wind directions (and approximate speed) for eleven of those same cities

*Table C.1, Figure C.1 and Figure C.2 are from Chapter 3 (by Subrato Chandra, Michael Houston and Philip Fairey) of FSEC's "Principles of Low Energy Building Design in Warm, Humid Climates".

Table C.1

Monthly Average Wind Speeds for Florida Cities

CITY	Jan	Feb	Mar	Apr	May	Jun	Jul	Aug	Sep	Oct	Nov	Dec	Annual
Apalachicola	8.4	8.8	9.0	8.7	7.8	7.2	6.6	6.7	8.1	8.1	8.1	8.0	8.0
Daytona Beach	9.1	9.9	10.1	9.9	9.2	8.4	7.6	7.3	8.7	9.5	8.8	8.8	8.9
Fort Myers	8.5	9.1	9.4	9.0	8.2	7.4	6.8	6.8	7.7	8.5	8.2	8.2	8.2
Jacksonville	8.4	9.4	9.4	9.1	8.6	8.3	7.5	7.2	8.1	8.6	8.1	8.2	8.4
Key West	12.0	12.0	12.5	12.8	10.8	9.8	9.9	9.5	9.9	11.4	12.0	12.0	11.2
Lakeland	7.3	7.8	7.8	7.7	6.9	6.2	5.7	5.5	6.6	7.2	6.9	6.9	6.9
Miami	9.4	10.1	10.4	10.7	9.5	8.2	7.8	7.8	8.1	9.4	9.5	9.1	9.2
Orlando	9.0	9.8	10.0	9.5	8.8	8.2	7.4	7.3	7.8	8.8	8.7	8.7	8.7
Pensacola	9.0	9.4	9.7	9.3	8.5	7.5	6.8	6.6	7.7	8.0	8.2	9.0	8.3
Tallahassee	7.7	7.9	8.4	7.5	6.8	6.4	5.7	5.6	6.4	6.9	6.6	6.9	6.9
Tampa	8.9	9.5	9.8	9.6	9.1	8.3	7.5	7.3	8.1	9.0	8.7	8.8	8.7
West Palm Beach	9.8	10.3	10.7	10.9	9.6	8.1	7.5	7.6	8.5	10.1	10.0	10.0	9.4

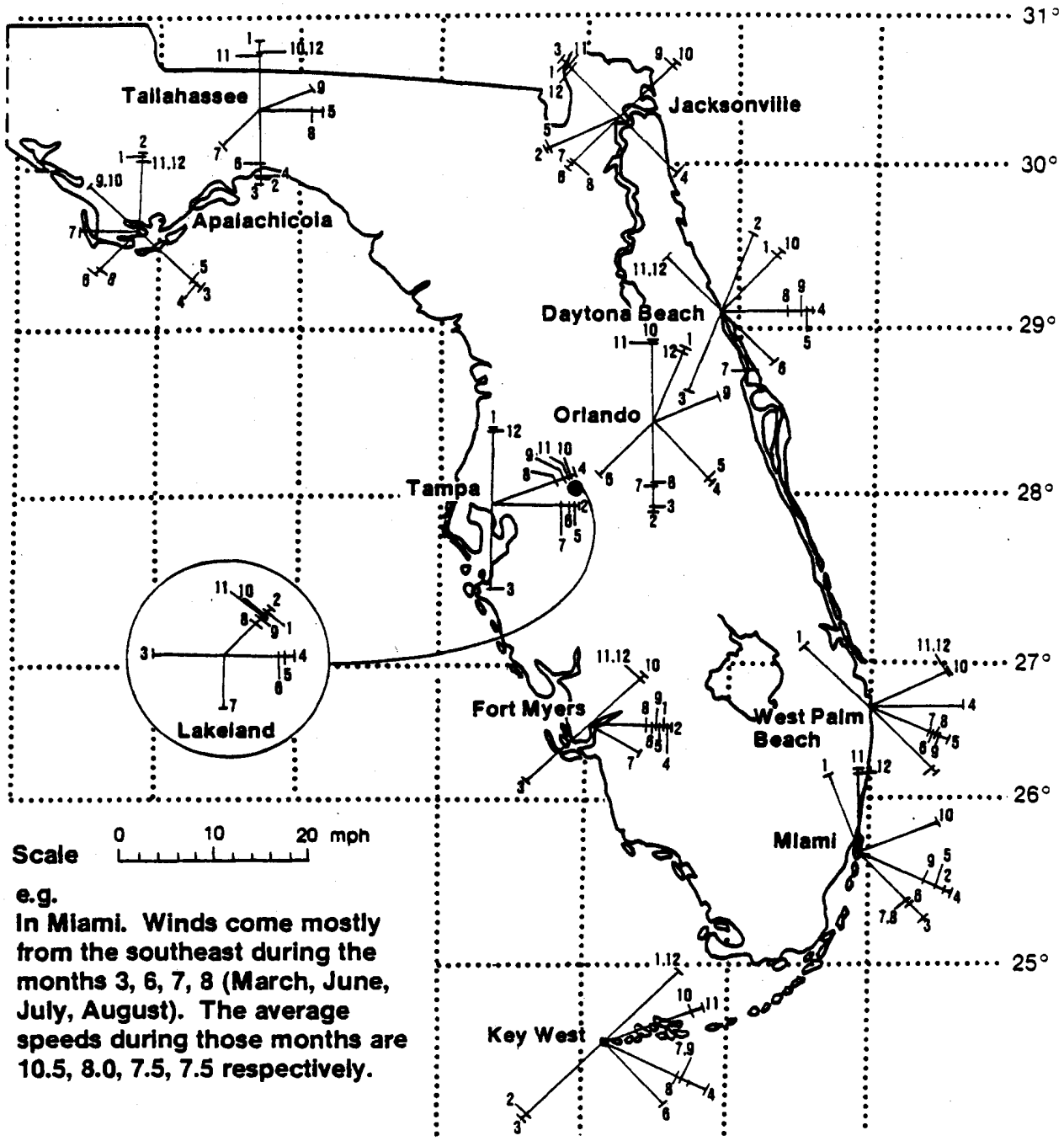

Figure C.1

Florida Average Wind Speeds and

Prevailing Directions for Each Month

C.3 EFFECT OF MICROGEOGRAPHY ON WIND SPEED

Figure C.2 gives correction factors which may be used to modify those the airport wind speeds to make them applicable other generic locations and heights above the ground near the reporting locations.

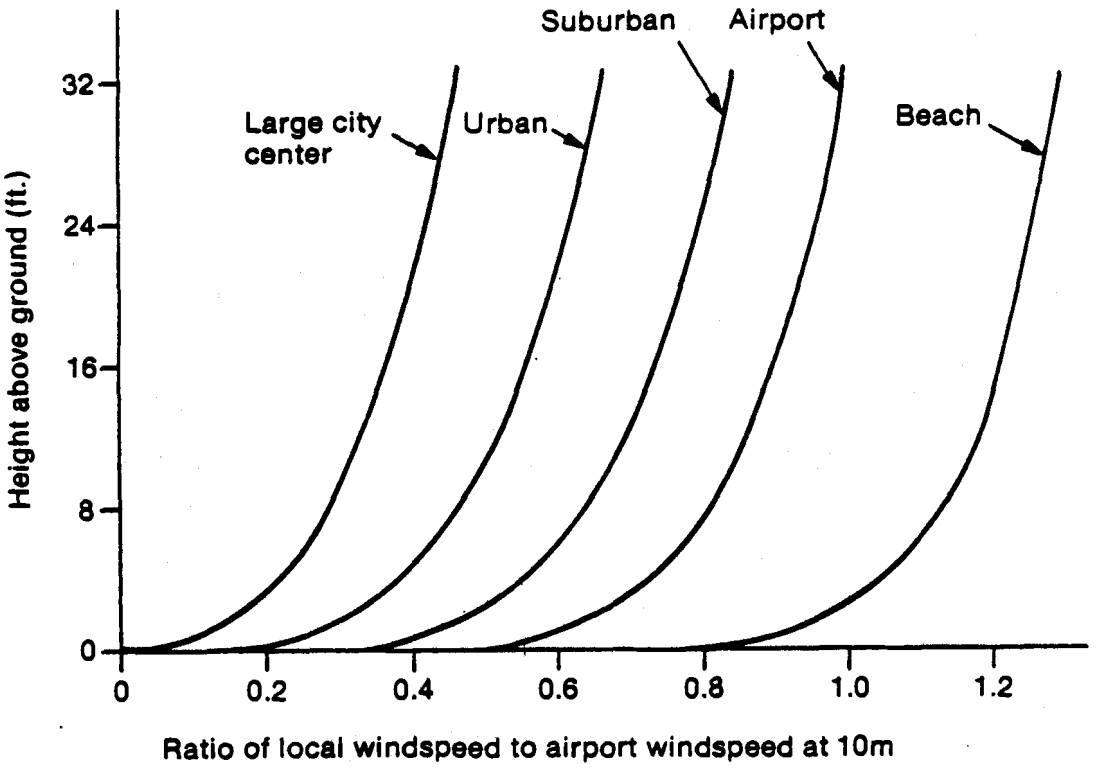

Figure C.2

Ratio of Local Windspeed to Airport Windspeed at 10m

Windspeed Variation with Height for Different Terrains

At this point it my be well to run through the solution to a hypothetical problem in order to illustrate the use of the information contained in Table C.1 and Figures C.1 and C.2.

Sample Problem

What is the average January wind speed and prevailing direction which may be expected 16 ft above ground level at an exposed Daytona Beach oceanfront motel site?

Solution

Figure C.1 contains prevailing wind direction information. From the line identified as #1 (January) for the Daytona Beach area, the direction is from the NE. The length of the line indicates that the wind speed is about 9 mph. The wind speed is more accurately obtained from Table C.1. The January wind speed at the airport 10 meters (about 33 ft) above the ground = 9.1 mph. The wind speed at 16 ft at the airport = .9 x 9.1 = 8.2 mph. On the beach at 16 ft elevation the wind speed is 1.2 x 9.1 = 10.9 mph. The correction factors .9 and 1.2 are found on the horizontal axis of Figure C.2. The curves on that figure are representative of geographic microclimates and the figures on the vertical axis represent the height (in ft) above the ground.

The above process relates the reported wind speed information -- Table C.1 and Figure C.1 -- to a nearby generic location and a specific elevation above the ground by the use of correction factors contained in Figure C.2.

C.4 VARIATIONS OF WIND SPEED WITH TIME OF DAY

Unfortunately, an examination of hourly wind speeds indicates that for all Florida cities those wind speeds occurring during the sunshine hours between 9 a.m. and 5 p.m., and during the October thru March pool heating period, are about 1.25 times the 24-hour daily average.

Table C.2 contains the wind speed ratios for three representative Florida cities: Jacksonville (north), Orlando (central), and Miami (south).

Table C.2
Ratio of 9 a.m. - 5 p.m. to 24-Hour Average Wind Speeds

	Jacksonville	Orlando	Miami
Oct	1.23	1.32	1.23
Nov	1.23	1.27	1.30
Dec	1.22	1.20	1.28
Jan	1.26	1.20	1.21
Feb	1.26	1.25	1.25
Mar	1.27	1.35	1.32

An hourly wind speed profile for a January day in Miami is presented in Figure C.3.

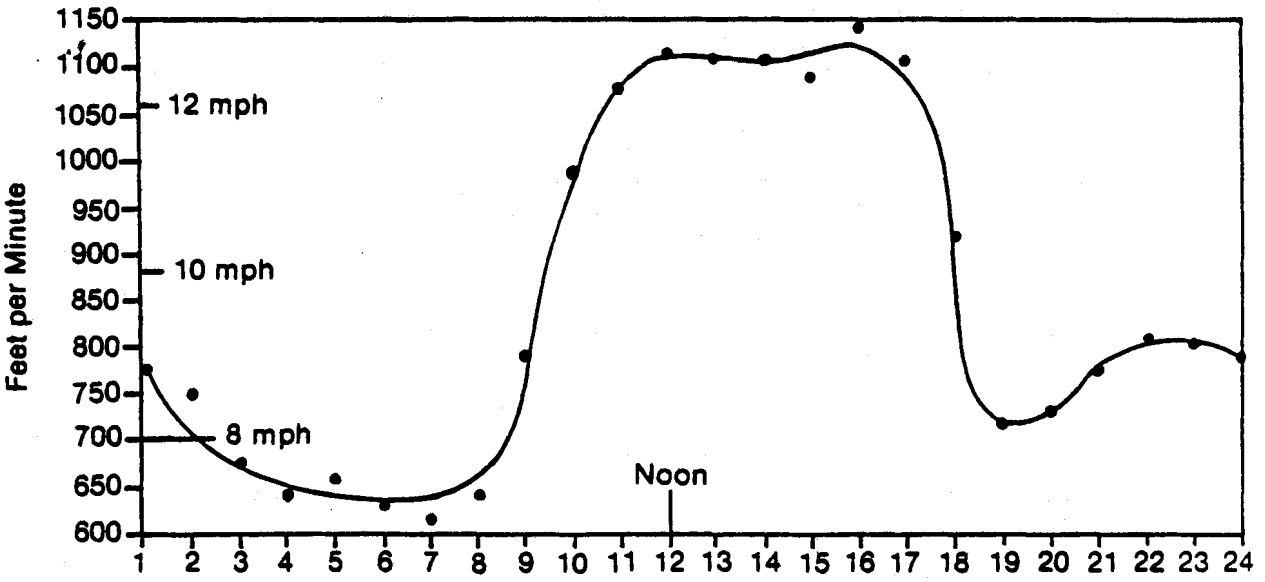

Figure C.3
Typical Hourly Wind Speed Profile
(January, Miami, Fla.)

Continuation of Sample Calculations

We now may refine our calculations of the wind speed at the Daytona Beach site so as to evaluate the wind speed during the operational hours

a solar pool heating system The wind speed during the 9 a.m. - 5 p.m period is: 10.9 x 1.26 = 13.73 mph (the 1.26 ratio factor corresponds to January in Jacksonville)

Availability of Climatological Data

Detailed climatological data (which was used to develop Table C.1) is available for a nominal price for many cities throughout the United States It may be obtained from

National Oceanic and Atmospheric Administration (NOAA)
Environmental Data and Information Service
National Climatic Center
Federal Building
Ashville, NC 28801

WIND BEHAVIOR DURING COLD SNAPS

During severe cold snaps the daytime wind speed increases in all Florida cities, though the coastal ones are the most severely effected. A quantitative evaluation of the increase is not required for an unfortunate reason The efficiency with which unglazed solar pool heating systems operate during cold, windy periods is so low that whether the airflow over their surfaces s 10 mph or 20 mph is, in most cases, an academic consideration.

THE EFFECT OF BUILDINGS ON WIND SPEED

The calculations that have been introduced to this point do not account for the effects of man-made structures. The next few paragraphs, tables and figures deal with those effects in sufficient detail for most unglazed collector array design and installation purposes.

"Air flow around buildings is complicated and erratic." "Buildings of even moderately complex shape, such as L-shaped structures formed by

two rectangular blocs, may generate flow patterns too complicated to generalize for design " Both of these statements appear on the first page of chapter 14 "Air Flow Around Buildings" of the 1981 edition of the ASHRAE Handbook of Fundamentals The solar designer or installer should recognize the limitations that those disclaimers impose on the accuracy of the following series of wind speed calculations

An examination of Figure C.4 discloses that the proper selection of a rooftop location will place an array of solar collectors in an eddy zone where they will escape the full force (and thus cooling effect) of cold winter winds

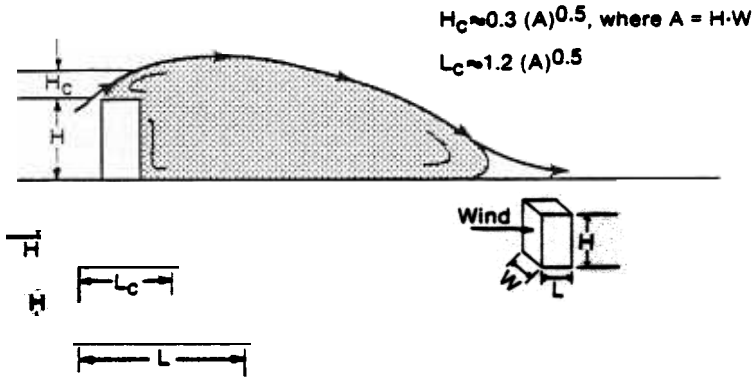

Dimensions of Recirculation Cavity

Ratio of building Width and height	Cavity Height, H_c	Cavity Length, L_c
Less than 8:1	$0.3\ (HW)^{0.5}$	$1.2\ (HW)^{0.5}$
Greater than 8:1	0.85 x smaller of H or W	3.4 x smaller of H or W

Figure C.4

Effect of Rectangular Buildings on Air Flow

It also discloses that a ground location in the lee of a building affords the same sort of protection

Figure C.5 shows that on large buildings the airflow reattaches itself to the building skin downwind from the eddy zone The eddy zone is indicated by reverse airflow arrows.

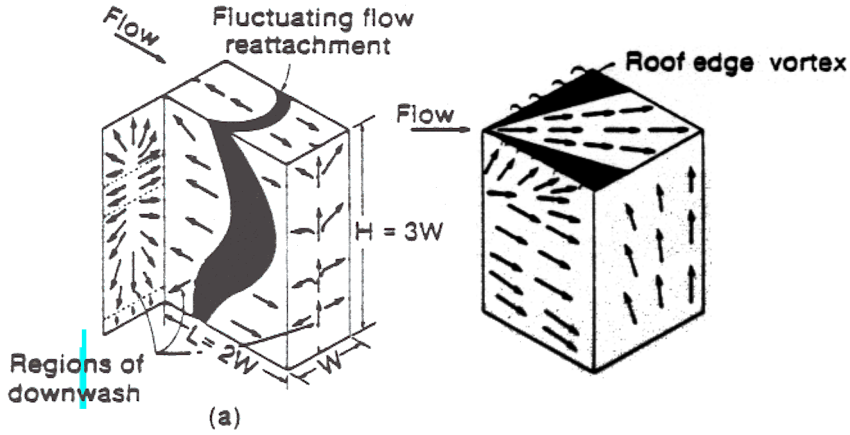

Figure C.5

Surface Flow Patterns

The table contained in Figure C.4 allows calculation of the height and length of the eddy cavity on the roof of a rectangular building Collector locations should be selected that avoid either the darkened zones shown in Figure C.5 or areas downwind of them

Figure C.6 shows relative air speeds over the flat roof of several building configurations when the wind directions are as indicated.

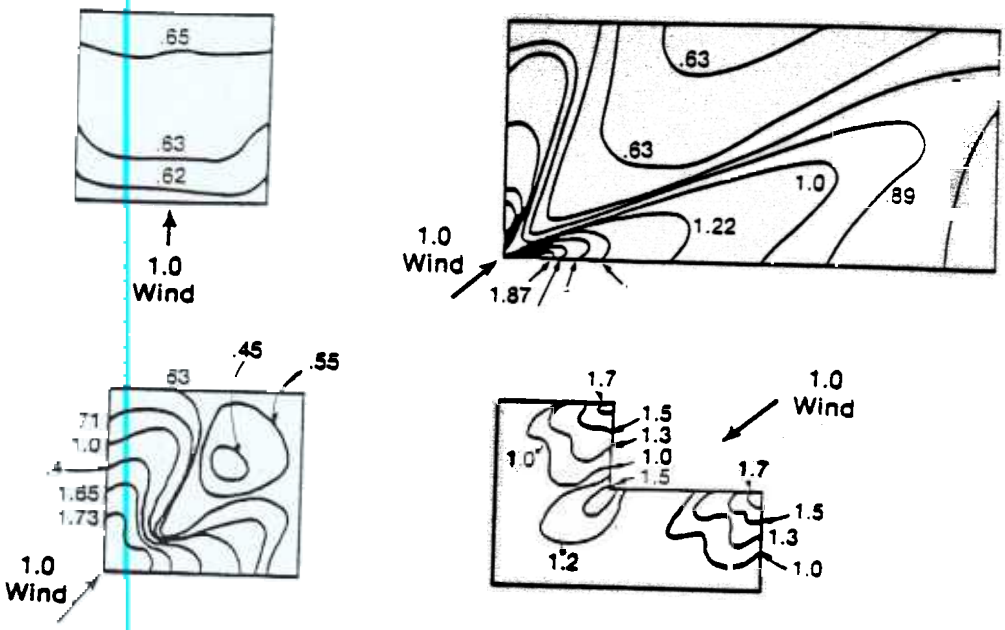

Figure C.6

Relative Wind Speeds on Flat Roofs

The airflow over pitched-roofed buildings is shown in Figure C.7

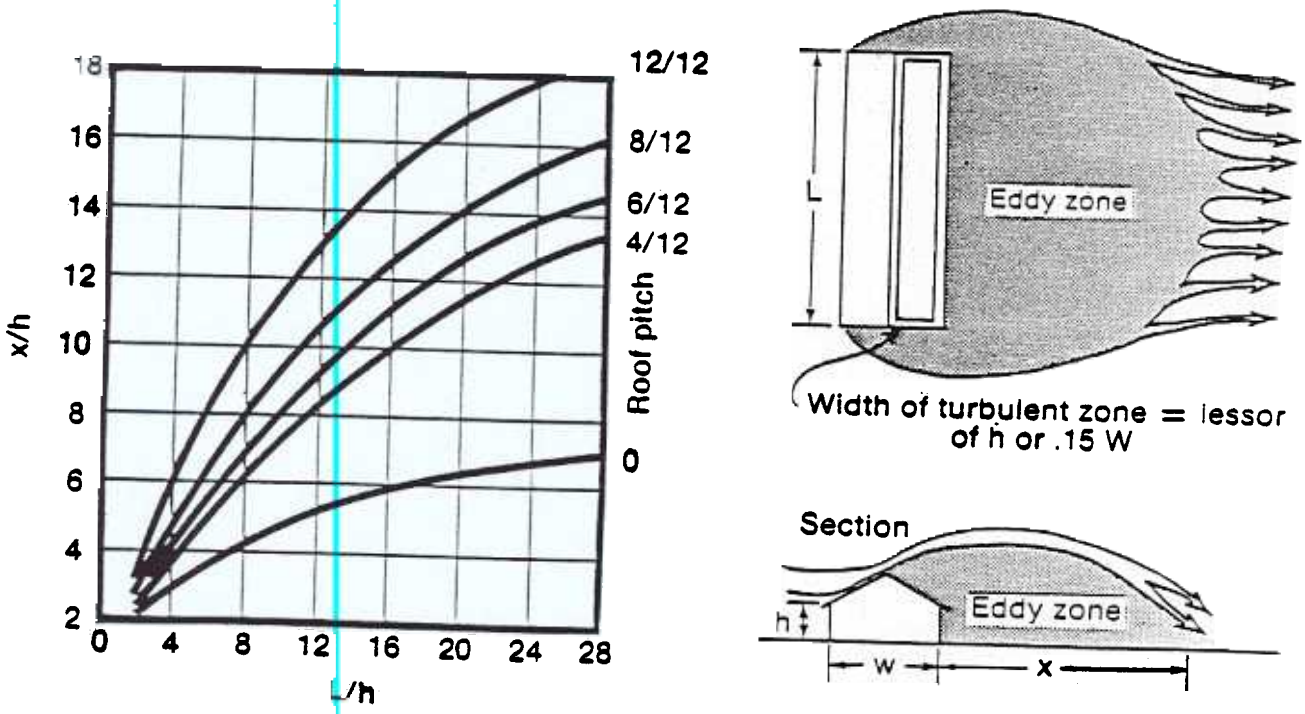

Figure C.7

Airflow Over Pitched Roof Buildings

wind speed on the downwind roof is relatively constant (except for severe edge effects caused by the overhangs) and has a value of about 71 of the free-flow airspeed (providing that the roof ridge is at a right angle to the wind direction

C.7 WIND SCREENS

Figure C.8 shows the effect of a wind screen on airflow patterns and speeds Agricultural interests believe that a wind screen with 30-50% porosity reduces the wind speed to about ¼ of the speed upwind of the screen for a distance downwind of 12 times the screen height (except for zones immediately downwind of the pores). The lower porosity (30%) lowers the mean down-screen airspeed but reduces the effective length of shelter. A nonporous parapet or wind screen may introduce large, strong eddys that actually increase the rate of airflow in some locations immediately downwind of the barrier.

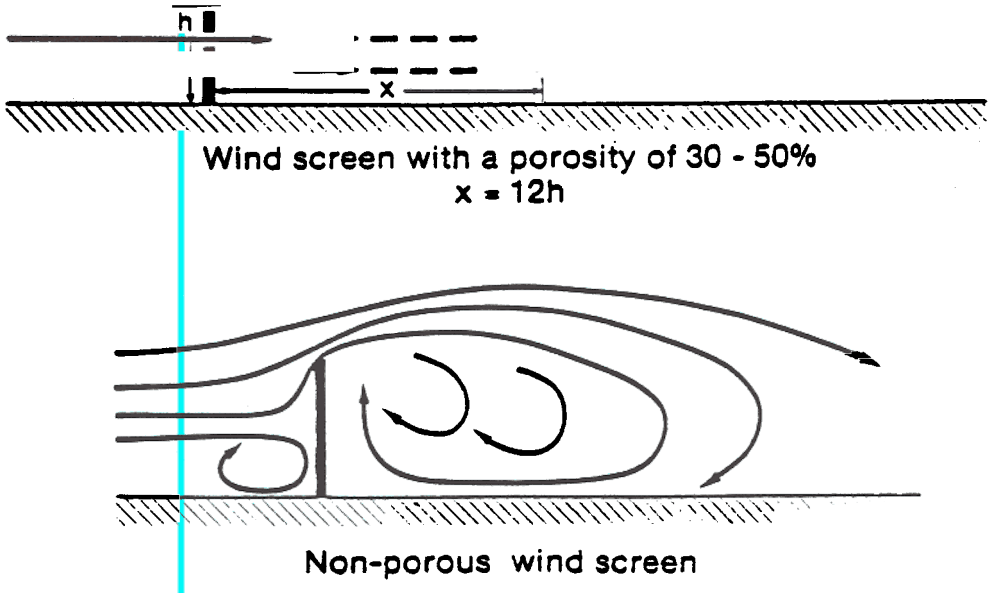

Figure C.8

Agricultural wind screens usually are tall tree rows which sometimes for miles across otherwise flat land The solar designer or installer deals with a different situation. Buildings are very likely to introduce primary turbulence and eddys and the wind screens used are relatively short (40-80 ft) fences that are typically only 3-6 ft high Consequently a more conservative estimate of the protection afforded by wind screens probably is called for

FSEC senior scientist Dr. Subrato Chandra has made a number of in depth studies of airflow in and around buildings. He recommends the inclusion of a downwind distance of four times the wind screen height in the protected zone and an airspeed reduction factor of three to evaluate the quality of protection offered.

If multiple wind screens are installed, care must be exercised to prevent solar shading

WIND SPEED CONVERSION TABLE

Table C.3 may be used to convert between the units which are commonly used to report wind speed.

Table C.3
Relationships Among Wind Speed Units

MPH	KNOTS	FPM	M/S
1	.9	88	.45
3	2.6	264	1.34
5	4.3	440	2.24
7	6.0	616	3.13
9	7.8	792	4.02
10	8.7	880	4.47
11	9.6	968	4.92
13	11.3	1144	5.81
15	13.0	1320	6.71

Continuation of Sample Calculations

We already have calculated an average, daytime, January wind speed of about 13 3/4 mph on the Daytona Beach oceanfront. What is the best location for an unglazed solar array on a new motel installation? buildings are tc be parallel to the beach with their long axis running N-S Their length is 80 ft, their depth is 65 ft, and the height of their roof is 16 ft above the ground. There is a 3-ft parapet surrounding the roof.

Step 1 Evaluate the wind conditions during the months when pool heating is required

A motel pool in Daytona Beach may need heating from early November thru late March Wind direction and speeds for those months may be evaluated by using the procedures outlined in the previous sample problem. The results are summarized in Table C.4.

Table C.4
Wind Data for Daytona Beach

	Wind Direction	Airport Wind Speed/mph	Site Wind Speed/mph
Nov	NW	8.8	13.28
Dec	NW	8.8	13.28
Jan	NE	9.1	13.73 (previously calculated)
Feb	N-NE	9.9	14.93
Mar	S-SW	10.1	15.24

Site-specific wind speeds for November, December, February and March may be estimated by ratio from the previously calculated January values

$$\frac{13.73}{9.9} = 1.509$$

8.8 x 1.509 = 13.28; etc.

An xamin T disclo: th du th th
ailin; ominently th NW th NE Alth th
dis domin th th also
th ro: tha dire tio urin ly col Mar th
th hif th rth drants
te igure airflo th ropo:
NE winds They mirro win ir
xim ti th coll array ul be th N NW

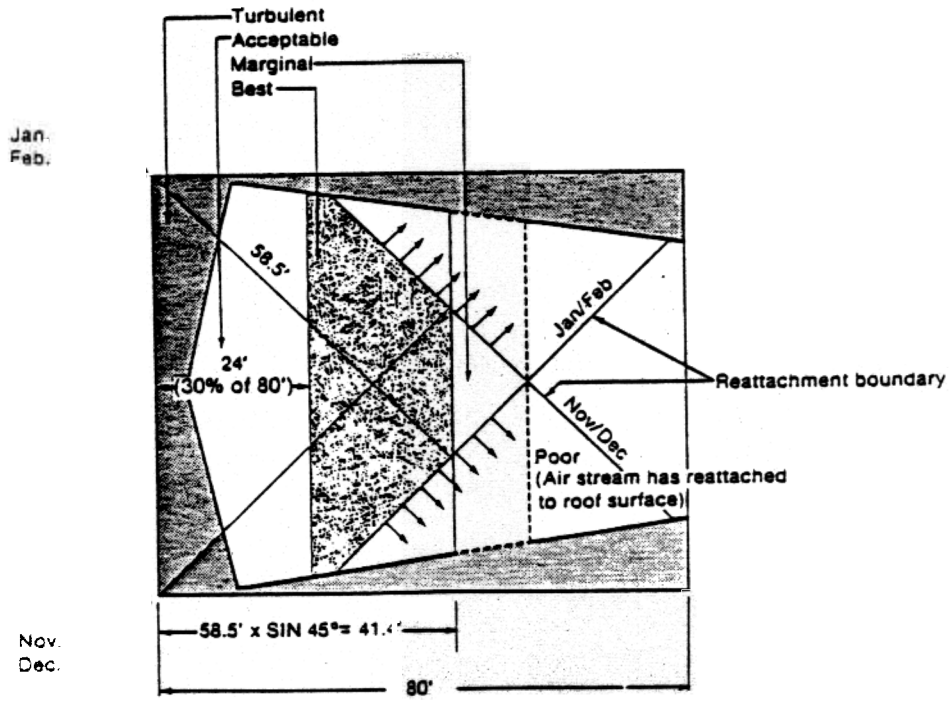

Figur

to lle to: Loc tio:

corners of the building where the wind speeds during different months may be excessive (see Figure C.5). The proper distances from the upwind (N, E, W) edges of the roof depend upon interpretation of the factors presented in Figures C.4, C.5 and C.6. The size of the eddy bubble pictured in Figure C.4 may be approximately evaluated from Figure C.4 even though it is somewhat distorted because the prevailing Nov/Dec and Jan/Feb wind directions are at 45° to the north wall of the building. The dimensions of the eddy bubble are:

$h_c = 3(h \times w)^{.5} = .3\ ((16 + 3) \times 80)^{.5} = 11.7$ ft high;

$l_c = 1.5(h \times w)^{.5} = ((16 + 3) \times 80)^{.5} = 58.5$ ft long

The height dimension is adequate to protect the type of collector array normally used for swimming pool heating.

The length of the eddy bubble should be measured along a 45° diagonal line from the NE (Jan/Feb) or NW (Nov/Dec) corners of the roof. A point 58.5 ft downwind of the corner is 58.5 x sine 45° or 41.4 ft downwind on a NS line Turbulent areas are depicted in Figure C.5. Figure C.6 shows a velocity ratio map which may be used to assist the solar designer or installer in the selection of the most desirable area of the roof (that with the lowest average wind speed during the cold months) for collector location An examination of all the factors allows us to draw a "map" such as Figure C.9

A ten-foot margin around the north, east and west edges of the roof should keep the collectors out of the turbulent zones depicted on Figure C.5 and C.6

C.9 EFFECT OF PARAPETS ON WIND SPEED

Figures C.10 a, b, and c show the effect of a parapet on the airflow distribution.

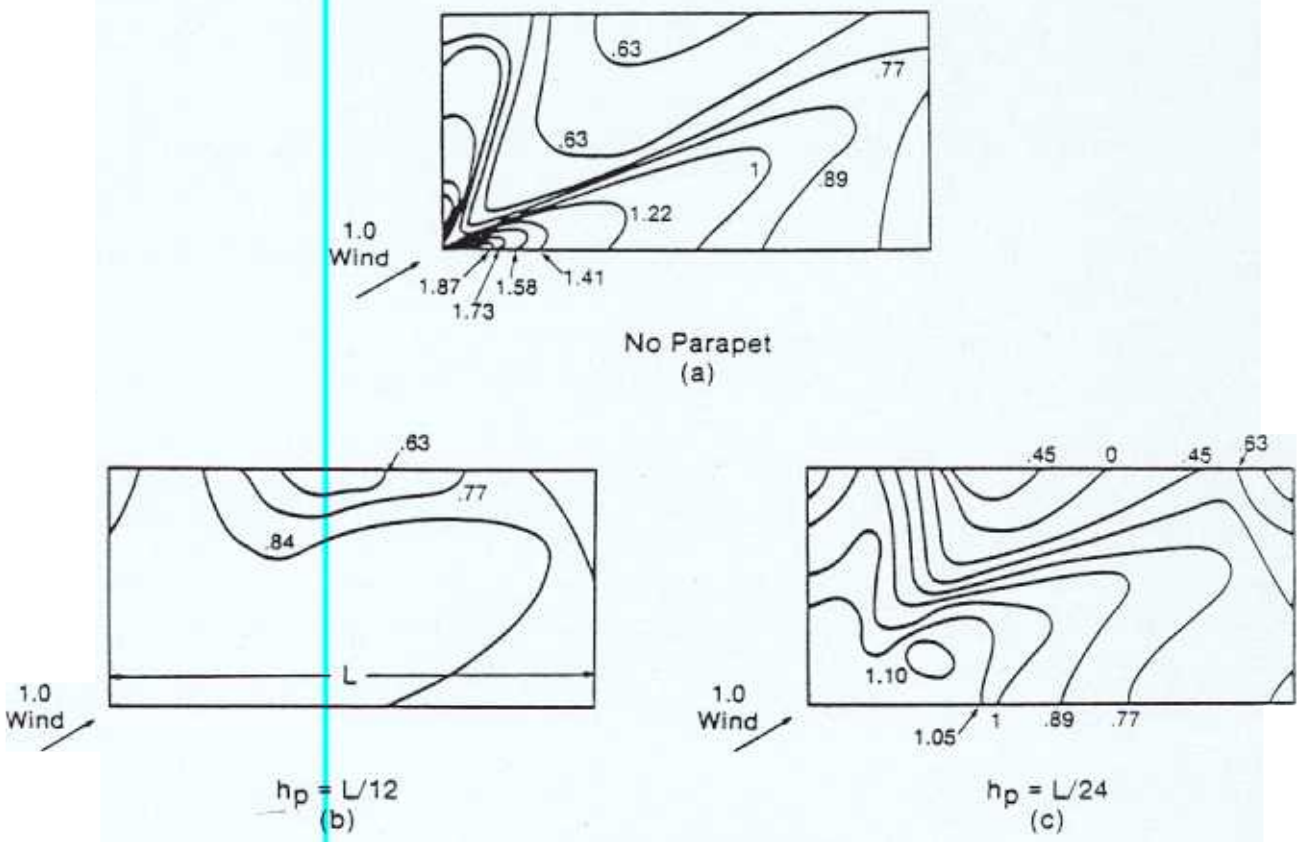

h_p = Parapet height
L = Building length

Figure C.10

Effect of Parapets on Wind Speed Patterns

The size of the collector array will dictate what portion of the roof will be used. If the motel pool is a small one, the entire array may be placed in the "best" zone.

Appendix D carries the hypothetical problem into sizing of the collector array.

Table C.1

Monthly Average Wind Speeds for Florida Cities

CITY	Jan	Feb	Mar	Apr	May	Jun	Jul	Aug	Sep	Oct	Nov	Dec	Annual
Apalachicola	8.4	8.8	9.0	8.7	7.8	7.2	6.6	6.7	8.1	8.1	8.1	8.0	8.0
Daytona Beach	9.1	9.9	10.1	9.9	9.2	8.4	7.6	7.3	8.7	9.5	8.8	8.8	8.9
Fort Myers	8.5	9.1	9.4	9.0	8.2	7.4	6.8	6.8	7.7	8.5	8.2	8.2	8.2
Jacksonville	8.4	9.4	9.4	9.1	8.6	8.3	7.5	7.2	8.1	8.6	8.1	8.2	8.4
Key West	12.0	12.0	12.5	12.8	10.8	9.8	9.9	9.5	9.9	11.4	12.0	12.0	11.2
Lakeland	7.3	7.8	7.8	7.7	6.9	6.2	5.7	5.5	6.6	7.2	6.9	6.9	6.9
Miami	9.4	10.1	10.4	10.7	9.5	8.2	7.8	7.8	8.1	9.4	9.5	9.1	9.2
Orlando	9.0	9.8	10.0	9.5	8.8	8.2	7.4	7.3	7.8	8.8	8.7	8.7	8.7
Pensacola	9.0	9.4	9.7	9.3	8.5	7.5	6.8	6.6	7.7	8.0	8.2	9.0	8.3
Tallahassee	7.7	7.9	8.4	7.5	6.8	6.4	5.7	5.6	6.4	6.9	6.6	6.9	6.9
Tampa	8.9	9.5	9.8	9.6	9.1	8.3	7.5	7.3	8.1	9.0	8.7	8.8	8.7
West Palm Beach	9.8	10.3	10.7	10.9	9.6	8.1	7.5	7.6	8.5	10.1	10.0	10.0	9.4

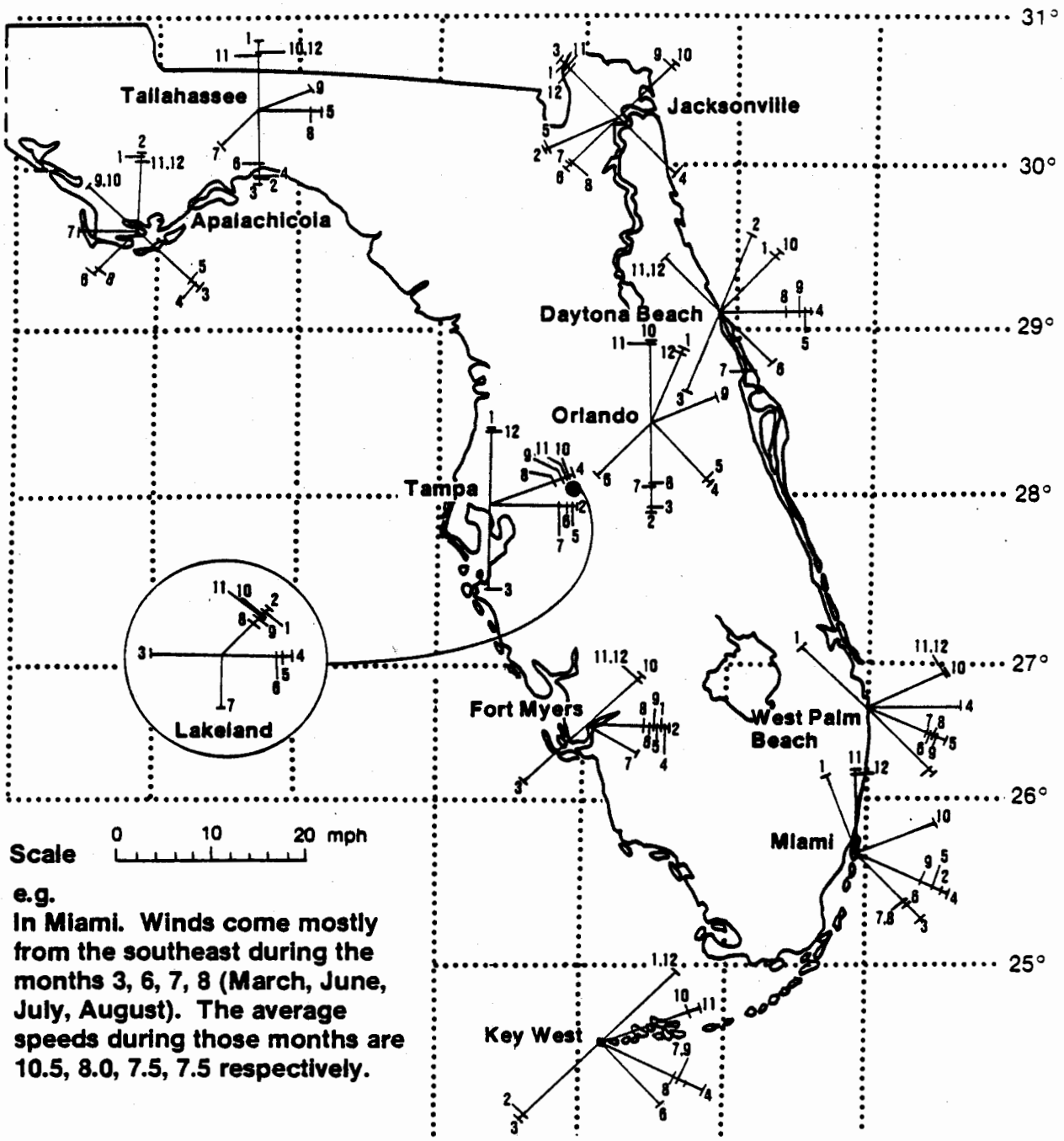

Figure C.1

Florida Average Wind Speeds and

Prevailing Directions for Each Month

C.3 EFFECT OF MICROGEOGRAPHY ON WIND SPEED

Figure C.2 gives correction factors which may be used to modify those the airport wind speeds to make them applicable other generic locations and heights above the ground near the reporting locations.

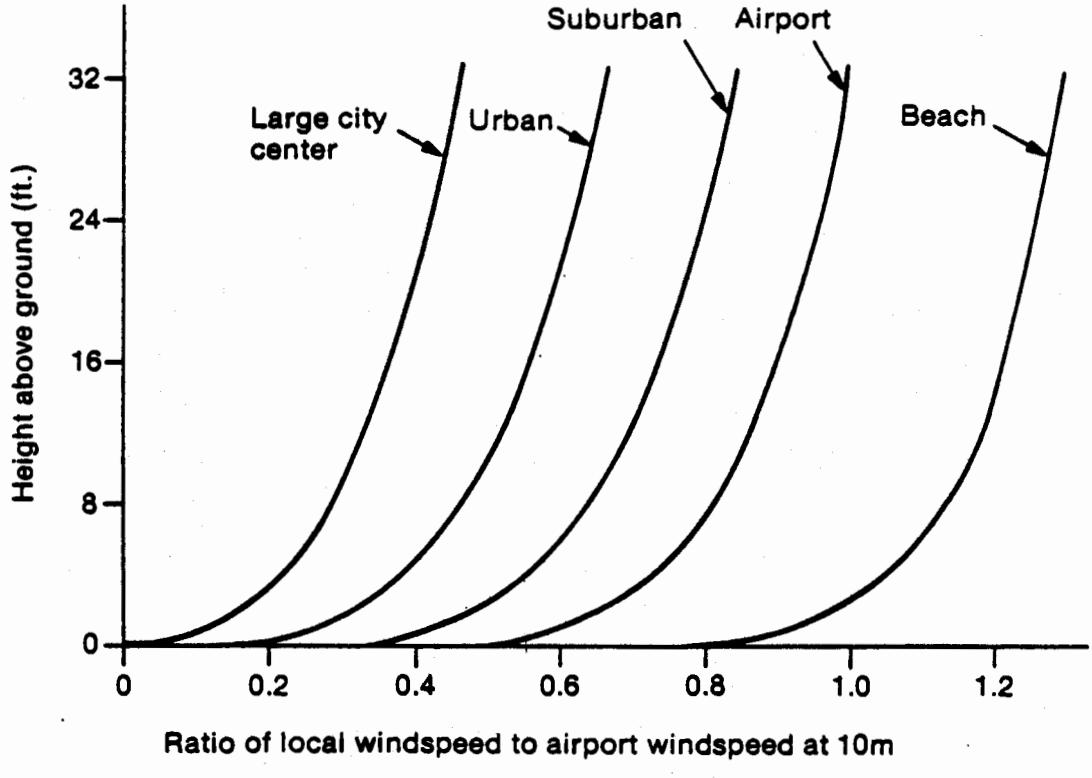

Figure C.2

Ratio of Local Windspeed to Airport Windspeed at 10m

Windspeed Variation with Height for Different Terrains

At this point it my be well to run through the solution to a hypothetical problem in order to illustrate the use of the information contained in Table C.1 and Figures C.1 and C.2.

Sample Problem

What is the average January wind speed and prevailing direction which may be expected 16 ft above ground level at an exposed Daytona Beach oceanfront motel site?

Solution

Figure C.1 contains prevailing wind direction information. From the line identified as #1 (January) for the Daytona Beach area, the direction is from the NE. The length of the line indicates that the wind speed is about 9 mph. The wind speed is more accurately obtained from Table C.1. The January wind speed at the airport 10 meters (about 33 ft) above the ground = 9.1 mph. The wind speed at 16 ft at the airport = .9 x 9.1 = 8.2 mph. On the beach at 16 ft elevation the wind speed is 1.2 x 9.1 = 10.9 mph. The correction factors .9 and 1.2 are found on the horizontal axis of Figure C.2. The curves on that figure are representative of geographic microclimates and the figures on the vertical axis represent the height (in ft) above the ground.

The above process relates the reported wind speed information -- Table C.1 and Figure C.1 -- to a nearby generic location and a specific elevation above the ground by the use of correction factors contained in Figure C.2.

C.4 VARIATIONS OF WIND SPEED WITH TIME OF DAY

Unfortunately, an examination of hourly wind speeds indicates that for all Florida cities those wind speeds occurring during the sunshine hours between 9 a.m. and 5 p.m., and during the October thru March pool heating period, are about 1.25 times the 24-hour daily average.

Table C.2 contains the wind speed ratios for three representative Florida cities: Jacksonville (north), Orlando (central), and Miami (south).

Table C.2
Ratio of 9 a.m. - 5 p.m. to 24-Hour Average Wind Speeds

	Jacksonville	Orlando	Miami
Oct	1.23	1.32	1.23
Nov	1.23	1.27	1.30
Dec	1.22	1.20	1.28
Jan	1.26	1.20	1.21
Feb	1.26	1.25	1.25
Mar	1.27	1.35	1.32

An hourly wind speed profile for a January day in Miami is presented in Figure C.3.

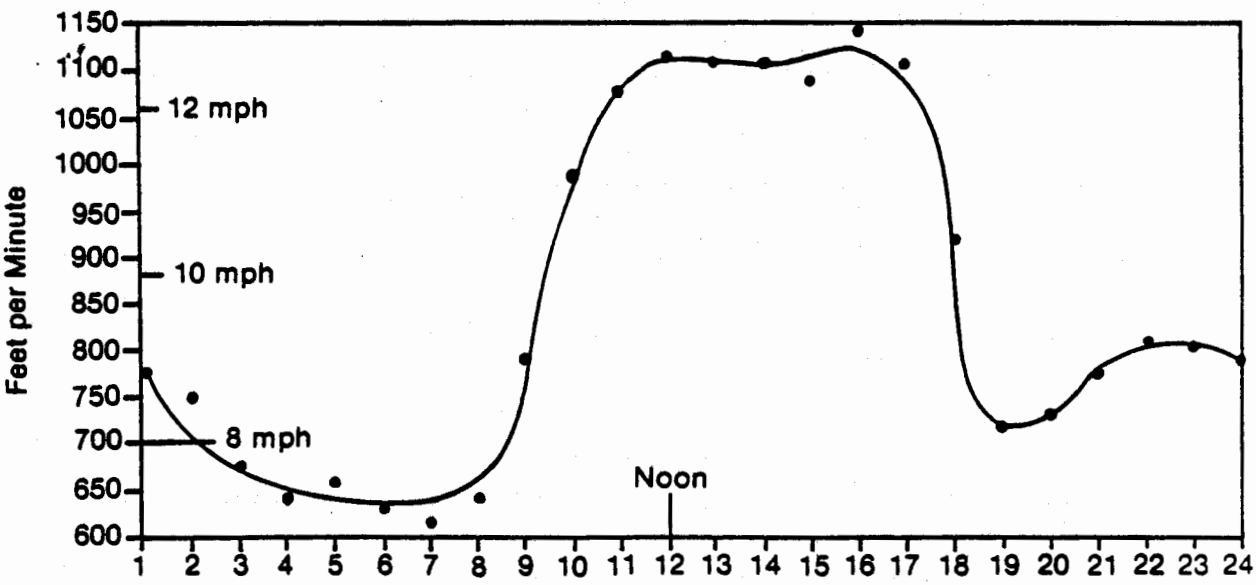

Figure C.3
Typical Hourly Wind Speed Profile
(January, Miami, Fla.)

Continuation of Sample Calculations

We now may refine our calculations of the wind speed at the Daytona Beach site so as to evaluate the wind speed during the operational hours

APPENDIX D

APPLYING THE SIZING METHODS

D.0 THE DESIGN ASSIGNMENT

The manager of a Daytona Beach oceanfront motel plans to install a solar pool heater with a full-load capability, LPG-fired, backup heater The motel is owned by a major chain which owns another motel in Ormond Beach -- six miles north of the Daytona Beach site. The buildings, site layout, pool size and relative pool location and climate are almost identical for the two motels. Monthly LPG consumption figures for pool heating at the Ormond Beach motel are available for the past six years. That pool does not have solar heater. Both pools are to be kept at a minimum water temperature of 80°F

The manager of the Daytona Beach motel has two estimates from solar contractors for installed solar pool heaters. One contractor proposes to use 2500 ft^2 of unglazed, flexible-mat collectors laid flat against the insulated roof deck. His bid for the installed system is $20,000. The other contractor plans to use forty 4' x 10' flat black, insulated solar collectors with copper passages and single-glass cover plates. They are to be mounted facing south at a 40° slope. His bid is $25,600. Neither contract includes the LPG backup heater It will be installed by the swimming pool contractor. Both contractors have good reputations Both systems use similiar flow control strategy (differentially controlled 1½-hp booster pumps and automatic valving) Freeze protection is adequately provided in both cases The chemical balance of the pool is carefully controlled so the contact of pool water with the copper passages in the glazed collectors is not seen as a problem

Both contractors contend that their system represents the best return on the initial investment and the manager has asked you to help him decide contract to accept. He has requested an estimate of monthly and annual savings based on average weather conditions and the history of energy consumed for pool heating at the Ormond Beach motel Finally he has requested that you advise his construction foreman so that he can effectively supervise the installation

THE CALCULATIONS REQUIRED

D.1.1 STEP Analyze the annual energy consumption of the Ormond Beach pool The average monthly energy consumption for pool heating at the Ormond Beach motel is reported in Table D.1

TABLE D.1

Ormond Beach Motel Pool Energy Consumption

Month	Gal LPG	$/Mo	Energy Consupmtion	
		($1.20/gal)	Btu/Mo	Btu/Day
	600	$ 720	38,640,000	1,288,000
	1350	$1620	86,940,000	2,804,516
	1500	$1800	96,600,000	3,116,129
	1455	$1746	93,702,000	3,346,500
	450	$ 540	28,980,000	934,839

D.1.2 STEP 2: Tabulate the Required Weather Data

STEP 2a Tabulate wind conditions using Table D.2

TABLE D.2

Site-specific Wind Conditions

Month	Direction	Site Wind Speed (in MPH) (from Table C.4, page C-13)	Rooftop Speed (in MPH) (site speed x [.33 to 5]
	NW	13.3	4.4 - 6.65
	NW	13.3	4.4 - 6.65
Jan	NE	13.7	4.5 - 6.9
	NNE	14.9	4.9 - 7.5
	SSW	15.2	5.0 - 7.6

Because 1600 ft^2 to 2500 ft^2 of collectors will be installed on the 5200 ft^2 roof, which is wind mapped in Figure C.9, some of the collectors will be subjected to as much as .5 times the unobstructed wind speed. Others receive the full protection afforded by the building and its parapet Thus, a range of roof top wind speeds is tabulated in Table D.2 Their arithmetic average will be used in subsequent calculations.

STEP 2b Tabulate daytime temperatures using information from the table on page E.10.

Table D.3
Daytime Temperature Data

Month	Tampa Day time Mean (24hr Average mean + 5°F)	Daytona 24hr Average Max	Mean
Nov	71.2	74.8	68.2
Dec	65.8	69.8	59.5
Jan	65.8	68.8	57.9
Feb	65.8	69.3	58.8
Mar	71.2	74.6	64.6

Daytona weather data does not appear in Appendix E Thus, data for the city with the most similiar weather should be chosen Jacksonville is too cold, Miami is too hot, Gainesville is inland and north of Daytona so Tampa appears to be a good choice.

Temperature data for Daytona Beach is available from NOAA (see page C-7 for the address) and is tabluated in the right hand two columns of Table D.3 Th correlation between the calculated daytime average temperature for Tampa and the average of measured mean and high temperatures for Daytona Beach is good.

STEP 2c Tabulate monthly available insolation data using the table on page E-10

TABLE D.4

Insolation Data (for Tampa)

Month	Average Btu/ft^2·day (Horizontal)	Average Btu/ft^2·day South facing, 40° slope
Nov	1314	1913
Dec	1112	1722
Jan	1204	1799
Feb	1439	1870
Mar	1756	1939

In this case, too, we will select Tampa weather data because it is the city with available insolation data listed in Appenidx E whose climate most resembles that found in Daytona Beach..

We now have tabulated the weather data that we will use to calculate the output of the two solar pool heating systems which require evaluation

D.1.3 STEP 3 Estimate the thermal performance of the competing solar systems

STEP 3a Assemble collector performance data for the collectors under consideration

Performance data for both the glazed and unglazed collectors under evaluation have been made available by the two competing solar contractors and are presented in Figure D.1

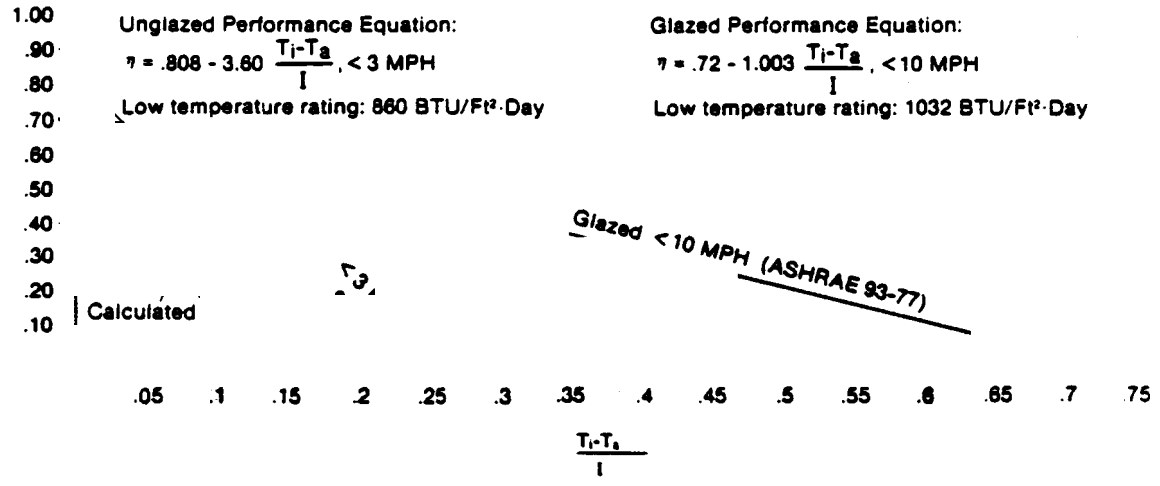

Figure D.

Thermal Performance Graphs

STEP 3b Estimate the thermal output of the unglazed solar system

TABLE D.5

Unglazed Collector Output
(Btu/ft^2·day)

Month	$t_i - t_a = \Delta T$ from Table D.3 (°F)	Horizontal insolation from Table D.4	Corrected Collector Output: Temp/Insol Correction from Fig. (A.5) (A.6)	Corrected Collector Output: Wind Speed from Table D.2 (mph)	Corrected Collector Output: Wind Speed Correction from Fig.(5.3)
Nov	80-71 = 9	1314	785*	5.5	700
Dec	80-66 = 14	1112	500(A.5)	5.5	380
Jan	80-66 = 14	1204	580(A.5)	5.7	450
Feb	80-66 = 14	1439	750(A.5)	6.2	630
Mar	80-71 = 9	1756	1110*	6.3	1080

*Average of values from Figure A.5 ($\Delta T = 14°$) and Figure A.6 ($\Delta T = 5°$) is used to approximate a ΔT of 9°F.

The dotted lines on Figures A.5 and A.6 trace the rerating path for a 860 Btu/ft^2·standard-Florida-day unglazed collector through the nomographs for November temperature/insolation conditions. The same procedure, using appropriate nomographs is used for each month during which pool heating is expected to be required.

The dotted lines on Figure 5.3 indicate the path through the speed correction nomograph for a 785 Btu/ft^2·day rating (the modified November collector rating, obtained by averaging values from $\Delta T = 14°$ and $\Delta T = 5°$ temp/insolation nomographs) Table D.6 lists the monthly output of the 2500 ft^2 unglazed-mat-type system which has been proposed predicted daily collector output has been multiplied by the number of days in each month and by the appropriate system correction factor, .95 (from Table 5.4), which corresponds to 0° slope and no heat exchanger

Table D.6
Thermal Output of Unglazed Solar Pool Heating System

Month	Collector output Btu x 10^6 /month	System Correction Factor	System Output Btu x 10^6 /month
Nov (30)	52.5	.95	49.9
Dec (31)	29.5	.95	27.9
Jan (31)	34.9	.95	33.1
Feb (28)	44.1	.95	41.9
Mar (31)	83.7	.95	79.5

In Table D.7 the monthly energy requirements of the pool and the energy predicted to be available from the unglazed solar pool heating system are tabulated

Table D.7

Pool Energy Requirements/Unglazed System Output
(Btu x 10^6/month)

Month	Pool Requirement (Table D.1)	Cost in $ $1.20/gal LPG (Table D.1)	Available from Solar System	Savings in Dollars
Nov	38.6	720	49.9*	720
Dec	86.9	1620	27.9	520
Jan	96.6	1800	33.1	617
Feb	93.7	1746	41.9	781
Mar	29.0	540	79.5*	540
		6426		3178

*Cannot all be utilized

STEP 3c. Estimate the thermal output of the glazed solar system

Table D.8

Daily Glazed Collector Output
(Btu/ft^2·day)

Month	t_i-t_a (Table 6.3)	Insolation on South-facing 30° Slope (Table D.4)	Collector Output Modified for Temp and Insolation (Fig. A.12, A.13)
Nov	9°F	1913	1290*
Dec	14°F	1722	1110
Jan	14°F	1799	1160
Feb	14°F	1870	1210
Mar	9°F	1939	1320*

*Average of values from A.12 and A.13 used

dotted lines on Figures A.12 and A.13 trace the modification of a glazed collector rated at 1032 Btu/ft^2·standard-Florida-day to reflect predicted November conditions: $t_i - t_a$ = 9°F, insolation rate = 1913 Btu/ft^2·day. The modification in this case indicates that because November conditions are better than the original rating conditions -- ΔT = 95° - 81° Δt of 14°, insolation rate = 1600 Btu/ft^2·day -- the predicted performance improves The same situation holds for all the pool heating months in this sample problem but certainly not for all months, locations and winter weather conditions in Florida.

output of glazed collectors does not require correction for wind speeds likely to be encountered during periods of operation in Florida

Table D.9 lists the predicted monthly output of the 1600 ft^2 glazed collector system which has been proposed

Table D.9

Thermal Output of Glazed Solar Pool Heating System
(Btu x 10^6/month)

Month	1600 ft^2 Collector Output	System Correction Factor	System Output
Nov (30)	61.9	.95	58.8
Dec (31)	55.1	.95	52.4
Jan (31)	57.5	.95	54.6
Feb (28)	54.2	.95	51.5
Mar (31)	65.5	.95	62.2

In this case the appropriate system correction factor is .95 (from Table 5.4). This is a more favorable system factor than that assigned to a horizontal surface because the collector slope (30°) improves the collection geometry. The incident angle of the incoming radiation is near 30° (or less) during winter collection hours The incident angle on a horizontal surface during winter collection hours is 30° (or more)

Table D.10 tabulates the monthly energy requirements of the pool and the energy predicted to be available from the glazed pool heating system.

Table D.10
Pool Energy Requirements/Glazed System Output
(Btu x 10^6/month)

Month	Pool Requirement (Table D.1)	Cost ($)	Available from Solar System	Savings ($)
Nov	38.6	720	58.8*	720
Dec	86.9	1620	52.4	975
Jan	96.6	1800	54.6	1016
Feb	93.7	1746	51.5	958
Mar	29.0	540	62.2*	540
		6426		4209

*Cannot all be used

D.2 STEP 4 COMPARE THE ECONOMICS OF BOTH PROPOSED SYSTEMS

Under the assumed weather conditions, system characteristics and both systems offer an equally good return on initial investment about 15%. The actual figures are: 3178/20000 = 15.9% for the unglazed system and 4209/26500 = 15.9% for the glazed system. The portion of the annual pool heating load is: 3162/ 6426 = 49% in the case of the unglazed collectors and 4209/6426 = 65% in the case of the more expensive array of glazed collectors FSEC suggests a solar fraction range of roughly .5 - .8 (50%-80%) as being cost effective for solar service or domestic water heat-systems It fairly may be argued that pool heating should not be limited to the same range of solar fractions. Whether such arguments are valid or invalid, both systems are reasonably close to the suggested range.

STEP 5 COMPARE CALCULATOR (APPENDIX F) WITH NOMOGRAPH (APPENDIX A) RESULTS

Table D-11 gives monthly inputs and outputs for the unglazed collectors under consideration as calculated using Program "A" for a HP 15C calculator

MONTH	TO°F	t_i	INSOLATION (Btu/ft²day)	WIND (MPH)	1st ORDER SLOPE TERM	INTERCEPT	Btu/ ft²·day
Nov.	71	80	1314	5.5	3.6 x 1.2* = 4.32	.808	737
Dec.	66	80	1112	5.5	3.6 x 1.2 = 4.32	.808	444
Jan.	66	80	1204	5.7	3.6 x 1.22 = 4.40	.808	506
Feb.	66	80	1439	6.2	3.6 x 1.28 = 4.60	.808	653
Mar.	71	80	1756	6.3	3.6 x 1.29 = 4.65	.808	1055

*Wind speed modifiers

The predicted annual solar savings using the calculator program equal vs $3178 using the nomographs--very close agreement

A similar analysis for the glazed collector array under consideration shows a difference of less than 1%

It should be noted that the comparisons are for collectors with first order thermal performance equations, either exactly like (unglazed) or very close to (glazed) those for which the nomographs were derived The agreement will not be this close if the thermal performance equations vary substantially from

$$\eta = 808 - 3.60 \frac{(t_i - t_a)}{I} \text{ (unglazed)}$$

$$\eta = 67 - 1.03 \frac{(t_i - t_a)}{I} \text{ (glazed)}$$

D.4 UNCERTAINTIES ASSOCIATED WITH USING "AVERAGE" VALUES

If January consisted of 31 equally sunny days with 66°F average daytime temperature, actual solar heater performance would closely follow the calculated performance. Its more likely however, that some January days will be cloudy, some clear, some unseasonably warm and some cold. This will affect the performance of both solar system and may cause major differences

If half of the month has 55°F average daytime temperatures and half the month has 75°F average daytime temperatures the monthly daytime average will remain at about 66°F It may be interesting to calculate changes in the January contribution of the two solar systems when adjusted on the basis of half a month of each of the new temperature profiles

Unglazed output	75° F (ΔT = 5°)	55° F (ΔT = 25°)
Rating modified for temp/insol (from Figure A.6 or A.4)	820 Btu/ft^2·day	200 Btu/ft^2·day
Rating modified for wind speed (from Figure 5.3)	725 Btu/ft^2·day	90 Btu/ft^2·day
half month output (Btu x 10^6)	$\frac{31}{2}$ x 725 x 2500 x 85 = 23.9	$\frac{31}{2}$ x 90 x 2500 x 85 = 3.0
	Total = 26.0	

So the output of the unglazed system drops 21% and becomes very unbalanced with respect to time of month

Glazed output	75° F	55° F
Rating modified for temp/insol (from Figure A.13 or A.11)	1260	1065
half month output: (Btu x 10^6)	$\frac{31}{2}$ x 1260 x 1600 x 95 = 29.7	$\frac{31}{2}$ x 1065 x 1600 x 95 = 25.1
	Total = 54.8	

So the output of the system remains about the same and is reasonably well balanced with respect to time of month

D.5 THE RELATIONSHIP BETWEEN SYSTEM SIZE AND ENERGY AND DOLLAR SAVINGS

It is noteworthy that in November and March both proposed solar pool heating systems produce more energy than the Ormond Beach pool used during those months Yet during December, January and February both produce less than is required. The selection of an economically optimized system must take the following factors into account

The cost per square foot of solar heating systems tends to rise as the system size is reduced. This is because certain costs -- engineering and

design, company overhead, controllers, valves and supply lines -- do not decrease linearly with a reduction in system size

Additionally the fraction of the thermal load carried by the solar system (solar fraction) does not increase linearly with collector area Witness Novembe and March when a system twice as large as those proposed would contribute no extra usable energy For these and other reasons, a system that meets about 50% - 80% of the annual thermal load is in a size and cost range that maximizes return on the buyer's investment

Another important fact is apparent from a close examination of tables D.7 and D.10 The maximum rate at which either solar system can contribute energy during the period when it is needed is about 2 million Btu on a clear, seasonally temperate day. During and immediately after a severe cold snap during which the motel-sized pool may lose 5-6 million Btu/day, the LPG-fired heater will have be used to maintain a comfortable pool temperature Such heaters are able to supply the pool with heat at the rate of 200,000 to 600,000 Btu per hour (depending on their size) on a 24-hour-a-day basis. If an unseasonable cold snap occurs in November or March, some LPG utilization costs may be incurred even during those months which on a 30-day basis have excess solar heating capacity available Thus, caution must be exercised in predicting the dollar savings that will result from solar pool heating system. Those savings are effected by weather patterns as well as by monthly average conditions

Fortunately swimming pools have high thermal storage capacity and may be heated to 5° - 7°F over the minimum acceptable temperature without causing user discomfort. A 50,000 gal pool has a thermal storage capacity of 432,000 Btu per °F and thus can maintain a minimum temperature of 80°F (aided by normal daily solar system input) through several days of cold weather in November or March if preheated to say 87°F

APPENDIX E

INSOLATION AND TEMPERATURE DATA FOR EIGHT FLORIDA CITIES

INTRODUCTION

In this appendix we present data on the solar energy available at each of eight Florida cities The average daily radiation is given in Btu/ft^2·day for each month of the year for a horizontal surface and for a variety of collector orientations. Data is presented for azimuth values of 0° (due south) 15°, 30° and 45°, and for slope (or tilt) values of 20°, 40°, 50°, 60°, 70° 80° and 90° (vertical). From this data one can compute the approximate energy that may be harvested annually at a given site in Florida, or estimate the best orientation for a system which will be used only in certain months of the year

Solar insolation levels for horizontal surfaces have been measured by weather stations in many American cities Pages E-3 through E-10 convert information to a more useful form for water and pool heating applications in eight Florida cities. These pages show daily averages as they apply to surfaces of varying tilt and orientation

A thorough discussion of how the conversions are made is beyond the scope of this text, but the following simplified explanation conveys the idea:

Since the earth moves in a slightly elliptical path around the sun, the quantity of energy impinging on a square foot of surface just outside the earth's atomosphere and normal to the sun's rays varies by about ±3 per- during the year. On the average it is 428 Btu/ft^2·hr (the solar constant). The amount of energy which impinges on a horizontal surface

outside the atmosphere (i.e., one parallel to a horizontal surface at a given latitude on earth) may be calculated by a straight-forward formula

any day of the year. That information is not too useful, however since the weather at identical latitudes varies greatly from place to place We can relate the computed extraterrrestial radiation to the measured horizontal surface radiation through a ratio which varies from month to month

any given location. This ration indicates the effects of clouds and atmosphere in reducing or attenuating the radiation striking a horizontal surface To estimate the radiation striking a tilted surface, collector tilt factors are derived and used as correction factors to the horizontal radia-

values These corrections lead to the average daily radiation data for tilted surfaces which are presented in the following pages

Solar Insolation Data
APALACHICOLA, FLORIDA

APALACHICOLA	FL 29.45												
	JAN	FEB	MAR	APR	MAY	JUN	JUL	AUG	SEP	OCT	NOV	DEC	
HORIZONTAL RAD.	1078	1340	1625	2025	2242	2176	1992	1866	1693	1539	1226	972	(BTU/DAY-FT2)
AVE. TEMP.	53.6	55.4	59.0	66.2	73.4	78.8	80.6	80.6	78.8	69.8	60.8	55.4	(F)
DEGREE-DAYS	347.	260.	180.	33.	0.	0.	0.	0.	0.	16.	153.	319.	(F-DAYS)

AVERAGE DAILY RADIATION ON TILTED SURFACES (BTU/DAY-FT2)

SLOPE	AZIMUTH	JAN	FEB	MAR	APR	MAY	JUN	JUL	AUG	SEP	OCT	NOV	DEC
20	0	1425	1633	1803	2060	2131	2010	1868	1842	1812	1834	1604	1309
30	0	1549	1722	1830	2007	2010	1870	1752	1771	1809	1916	1736	1432
40	0	1634	1769	1814	1910	1848	1696	1603	1663	1764	1951	1824	1519
50	0	1677	1773	1756	1769	1651	1494	1428	1522	1679	1937	1865	1568
60	0	1678	1733	1656	1592	1426	1272	1231	1351	1556	1876	1859	1577
70	0	1637	1651	1519	1382	1181	1038	1020	1158	1398	1769	1805	1546
80	0	1554	1529	1348	1148	929	807	808	949	1212	1618	1705	1476
90	0	1435	1374	1152	903	692	606	615	740	1007	1434	1566	1371
20	15	1412	1621	1796	2061	2137	2017	1873	1845	1809	1821	1589	1296
30	15	1529	1704	1821	2013	2021	1883	1762	1778	1806	1898	1714	1413
40	15	1608	1747	1804	1921	1867	1716	1620	1676	1764	1928	1796	1495
50	15	1647	1746	1746	1789	1679	1522	1451	1541	1682	1911	1832	1539
60	15	1648	1703	1647	1621	1464	1308	1262	1379	1564	1846	1821	1544
70	15	1600	1618	1513	1423	1231	1084	1061	1196	1413	1736	1764	1511
80	15	1515	1494	1346	1204	991	861	857	999	1236	1585	1662	1439
90	15	1396	1339	1157	978	765	663	669	803	1042	1401	1522	1334
20	30	1373	1588	1778	2060	2152	2036	1888	1849	1797	1790	1547	1258
30	30	1472	1659	1799	2018	2051	1918	1790	1791	1794	1855	1653	1358
40	30	1536	1690	1781	1937	1916	1770	1665	1701	1755	1876	1718	1424
50	30	1561	1682	1724	1819	1761	1599	1515	1582	1680	1853	1740	1455
60	30	1547	1634	1632	1670	1562	1409	1347	1438	1571	1787	1718	1449
70	30	1495	1547	1506	1494	1356	1209	1168	1275	1434	1680	1654	1407
80	30	1407	1426	1353	1299	1145	1009	986	1101	1273	1536	1549	1331
90	30	1287	1279	1183	1101	944	826	815	928	1101	1365	1410	1225
20	45	1315	1540	1748	2052	2167	2060	1906	1851	1777	1741	1484	1201
30	45	1391	1593	1761	2016	2083	1961	1823	1801	1772	1790	1565	1277
40	45	1435	1612	1741	1945	1969	1837	1716	1723	1734	1801	1610	1324
50	45	1446	1596	1688	1843	1828	1690	1588	1619	1666	1774	1618	1339
60	45	1423	1546	1603	1711	1664	1526	1441	1493	1568	1709	1588	1323
70	45	1367	1464	1489	1557	1485	1351	1284	1349	1445	1610	1522	1276
80	45	1282	1353	1352	1385	1298	1173	1121	1195	1303	1480	1423	1200
90	45	1171	1220	1201	1209	1117	1004	965	1039	1150	1328	1296	1101

Solar Insolation Data
GAINESVILLE, FLORIDA

GAINESVILLE	FL	29.39											
	JAN	FEB	MAR	APR	MAY	JUN	JUL	AUG	SEP	OCT	NOV	DEC	
HORIZONTAL RAD.	1023	1351	1638	1984	2157	2003	1914	1870	1635	1355	1170	935	(BTU/DAY-FT2)
AVE. TEMP.	55.4	57.2	62.6	69.8	75.2	78.8	80.6	80.6	78.8	71.6	62.6	57.2	(F)
DEGREE-DAYS	332.	246.	174.	21.	0.	0.	0.	0.	0.	12.	144.	310.	(F-DAYS)

AVERAGE DAILY RADIATION ON TILTED SURFACES (BTU/DAY-FT2)

SLOPE	AZIMUTH	JAN	FEB	MAR	APR	MAY	JUN	JUL	AUG	SEP	OCT	NOV	DEC
20	0	1340	1647	1820	2017	2052	1855	1797	1846	1745	1591	1519	1250
30	0	1452	1737	1847	1965	1936	1729	1686	1774	1741	1654	1640	1364
40	0	1528	1785	1831	1869	1782	1573	1545	1666	1697	1678	1719	1445
50	0	1566	1789	1772	1732	1594	1392	1378	1524	1614	1662	1756	1489
60	0	1565	1749	1672	1559	1379	1192	1190	1353	1496	1606	1748	1496
70	0	1524	1665	1533	1354	1147	981	990	1159	1345	1511	1695	1465
80	0	1446	1542	1359	1126	906	772	788	950	1167	1362	1600	1398
90	0	1335	1386	1162	888	681	590	604	739	970	1225	1469	1298
20	15	1327	1635	1813	2018	2057	1861	1802	1848	1742	1581	1505	1238
30	15	1434	1719	1839	1970	1947	1740	1698	1781	1738	1640	1620	1346
40	15	1505	1762	1822	1880	1799	1590	1561	1678	1696	1660	1694	1422
50	15	1538	1762	1762	1781	1620	1416	1400	1543	1617	1640	1725	1462
60	15	1534	1718	1663	1587	1415	1223	1220	1381	1503	1581	1713	1465
70	15	1490	1632	1526	1394	1193	1021	1028	1197	1359	1485	1658	1432
80	15	1410	1507	1357	1180	964	820	834	999	1189	1356	1561	1363
90	15	1299	1350	1166	960	749	639	655	803	1004	1199	1429	1263
20	30	1292	1602	1794	2017	2071	1878	1818	1853	1731	1555	1466	1202
30	30	1382	1673	1816	1975	1975	1771	1722	1794	1727	1604	1563	1295
40	30	1438	1705	1798	1896	1846	1638	1603	1704	1688	1617	1621	1355
50	30	1459	1697	1741	1781	1688	1483	1460	1584	1615	1593	1640	1383
60	30	1445	1648	1647	1634	1507	1311	1300	1440	1511	1534	1618	1376
70	30	1395	1561	1520	1463	1311	1130	1128	1276	1379	1440	1556	1336
80	30	1311	1439	1365	1273	1109	949	955	1102	1225	1316	1456	1262
90	30	1199	1290	1193	1080	917	782	792	929	1060	1170	1325	1161
20	45	1239	1553	1764	2010	2086	1899	1832	1855	1712	1516	1408	1149
30	45	1307	1607	1778	1974	2005	1810	1753	1804	1706	1552	1482	1220
40	45	1346	1626	1758	1904	1895	1696	1651	1726	1669	1557	1522	1262
50	45	1354	1610	1704	1803	1760	1563	1528	1622	1602	1529	1528	1275
60	45	1331	1560	1618	1675	1604	1414	1388	1495	1508	1471	1498	1258
70	45	1278	1477	1503	1524	1432	1254	1238	1351	1390	1383	1434	1213
80	45	1197	1365	1365	1356	1253	1092	1082	1196	1253	1270	1340	1140
90	45	1093	1231	1212	1184	1079	938	933	1040	1106	1140	1220	1045

Solar Insolation Data
JACKSONVILLE, FLORIDA

JACKSONVILLE	FL	30.25											
		JAN	FEB	MAR	APR	MAY	JUN	JUL	AUG	SEP	OCT	NOV	DEC	
HORIZONTAL RAD.		984	1275	1559	1894	2049	1935	1924	1764	1411	1220	1010	847	(BTU/DAY-FT2)
AVE. TEMP.		53.6	55.4	60.8	68.0	73.4	78.8	80.6	80.6	77.0	69.8	60.8	53.6	(F)
DEGREE-DAYS		348.	282.	176.	24.	0.	0.	0.	0.	0.	19.	161.	317.	(F-DAYS)

AVERAGE DAILY RADIATION ON TILTED SURFACES (BTU/DAY-FT2)

SLOPE	AZIMUTH	JAN	FEB	MAR	APR	MAY	JUN	JUL	AUG	SEP	OCT	NOV	DEC
20	0	1295	1556	1735	1931	1957	1800	1811	1736	1501	1426	1295	1128
30	0	1406	1643	1763	1884	1852	1683	1703	1672	1497	1482	1393	1230
40	0	1483	1689	1750	1796	1710	1536	1563	1574	1460	1502	1458	1302
50	0	1522	1695	1696	1669	1536	1364	1397	1445	1391	1488	1486	1342
60	0	1524	1659	1602	1507	1337	1174	1210	1288	1292	1438	1478	1349
70	0	1487	1582	1472	1318	1120	973	1009	1110	1167	1356	1434	1322
80	0	1413	1466	1310	1100	895	773	806	917	1018	1242	1354	1262
90	0	1307	1322	1124	876	682	595	619	723	855	1105	1244	1174
20	15	1283	1545	1726	1932	1962	1805	1818	1738	1499	1418	1284	1117
30	15	1389	1626	1754	1889	1861	1693	1712	1678	1495	1469	1377	1215
40	15	1460	1668	1740	1806	1726	1552	1576	1585	1459	1486	1436	1282
50	15	1495	1669	1686	1686	1560	1386	1419	1462	1393	1469	1461	1316
60	15	1493	1629	1593	1532	1369	1203	1239	1313	1297	1417	1450	1322
70	15	1454	1550	1466	1351	1162	1010	1046	1144	1177	1333	1403	1292
80	15	1378	1434	1307	1149	947	817	851	961	1035	1219	1322	1231
90	15	1271	1288	1126	941	743	641	669	779	881	1081	1211	1142
20	30	1248	1513	1710	1930	1974	1821	1829	1742	1490	1395	1251	1086
30	30	1338	1582	1732	1893	1886	1721	1738	1690	1485	1438	1330	1168
40	30	1396	1613	1716	1819	1767	1596	1620	1607	1452	1449	1377	1223
50	30	1418	1607	1664	1712	1621	1445	1478	1498	1390	1428	1391	1248
60	30	1406	1563	1577	1575	1452	1285	1318	1365	1302	1375	1371	1242
70	30	1359	1482	1458	1413	1268	1111	1146	1214	1191	1292	1319	1206
80	30	1280	1369	1312	1233	1078	936	970	1062	1062	1183	1235	1141
90	30	1173	1229	1149	1049	895	774	805	890	923	1054	1125	1051
20	45	1196	1467	1681	1922	1987	1840	1845	1743	1474	1361	1204	1039
30	45	1264	1519	1695	1890	1913	1756	1768	1698	1467	1392	1264	1101
40	45	1304	1539	1677	1828	1811	1649	1667	1626	1435	1396	1295	1139
50	45	1314	1525	1627	1731	1685	1522	1544	1530	1376	1371	1298	1151
60	45	1293	1478	1547	1610	1538	1380	1405	1413	1298	1319	1272	1136
70	45	1243	1401	1439	1467	1377	1227	1254	1279	1198	1241	1218	1096
80	45	1166	1296	1308	1308	1206	1070	1097	1135	1081	1141	1138	1031
90	45	1067	1171	1164	1144	1042	920	945	989	957	1025	1037	946

Solar Insolation Data
KEY WEST, FLORIDA

KEY WEST FL 24.33

	JAN	FEB	MAR	APR	MAY	JUN	JUL	AUG	SEP	OCT	NOV	DEC	
HORIZONTAL RAD.	1205	1511	1806	2106	2134	2001	1968	1845	1640	1452	1223	1076	(BTU/DAY-FT2)
AVE. TEMP.	69.8	69.8	73.4	77.0	80.6	82.4	84.2	84.2	82.4	78.8	73.4	69.8	(F)
DEGREE-DAYS	16.	25.	5.	0.	0.	0.	0.	0.	0.	0.	0.	18.	(F-DAYS)

AVERAGE DAILY RADIATION ON TILTED SURFACES (BTU/DAY-FT2)

SLOPE	AZIMUTH	JAN	FEB	MAR	APR	MAY	JUN	JUL	AUG	SEP	OCT	NOV	DEC
20	0	1520	1784	1960	2098	1989	1817	1810	1766	1709	1653	1509	1375
30	0	1624	1859	1969	2021	1855	1674	1679	1700	1686	1698	1599	1477
40	0	1689	1887	1931	1899	1685	1503	1517	1578	1625	1702	1651	1543
50	0	1712	1870	1847	1735	1485	1308	1331	1426	1528	1666	1663	1571
60	0	1693	1806	1720	1535	1262	1098	1127	1248	1399	1591	1634	1560
70	0	1631	1701	1555	1305	1026	884	916	1050	1240	1479	1565	1511
80	0	1530	1554	1355	1055	790	679	708	842	1057	1334	1458	1425
90	0	1394	1376	1132	800	582	525	538	641	861	1164	1320	1307
20	15	1507	1773	1954	2101	1995	1825	1817	1780	1707	1645	1497	1363
30	15	1606	1842	1961	2029	1868	1688	1691	1708	1685	1685	1582	1459
40	15	1665	1866	1923	1913	1706	1523	1536	1593	1627	1685	1629	1521
50	15	1684	1844	1840	1769	1515	1336	1356	1448	1534	1647	1637	1545
60	15	1661	1778	1715	1570	1303	1135	1163	1279	1410	1570	1604	1531
70	15	1597	1669	1553	1355	1079	929	960	1093	1258	1457	1533	1479
80	15	1493	1521	1360	1124	855	732	762	899	1085	1312	1425	1391
90	15	1358	1342	1147	893	656	569	591	713	903	1142	1286	1273
20	30	1471	1742	1938	2103	2013	1845	1835	1798	1700	1622	1464	1328
30	30	1553	1798	1942	2040	1901	1724	1724	1725	1679	1654	1535	1409
40	30	1598	1813	1905	1938	1759	1579	1588	1624	1625	1650	1569	1457
50	30	1605	1785	1825	1801	1592	1414	1430	1495	1540	1608	1565	1469
60	30	1572	1716	1711	1634	1406	1238	1258	1346	1426	1532	1526	1445
70	30	1501	1608	1562	1445	1209	1053	1079	1182	1269	1423	1450	1386
80	30	1395	1465	1387	1242	1014	876	903	1012	1134	1287	1340	1295
90	30	1261	1298	1196	1043	835	721	746	849	974	1131	1204	1176
20	45	1418	1696	1911	2103	2033	1872	1857	1805	1686	1588	1416	1278
30	45	1479	1736	1910	2048	1940	1770	1764	1743	1666	1609	1468	1338
40	45	1507	1740	1873	1960	1819	1647	1648	1655	1616	1599	1488	1368
50	45	1501	1708	1801	1841	1676	1506	1513	1543	1539	1556	1475	1367
60	45	1461	1639	1696	1698	1516	1352	1364	1413	1437	1483	1430	1335
70	45	1390	1538	1563	1530	1345	1192	1207	1269	1315	1383	1355	1274
80	45	1290	1409	1408	1352	1171	1033	1050	1117	1178	1260	1253	1186
90	45	1168	1261	1243	1175	1006	886	903	969	1035	1123	1130	1077

Solar Insolation Data
MIAMI, FLORIDA

MIAMI	FL	25.47											
	JAN	FEB	MAR	APR	MAY	JUN	JUL	AUG	SEP	OCT	NOV	DEC	
HORIZONTAL RAD.	1263	1531	1808	2003	2032	1955	1977	1870	1646	1432	1303	1174	(BTU/DAY-FT2)
AVE. TEMP.	66.2	66.2	69.8	73.4	77.0	80.6	80.6	82.4	80.6	77.0	71.6	68.0	(F)
DEGREE-DAYS	74.	56.	19.	0.	0.	0.	0.	0.	0.	0.	0.	65.	(F-DAYS)

AVERAGE DAILY RADIATION ON TILTED SURFACES (BTU/DAY-FT2)

SLOPE	AZIMUTH	JAN	FEB	MAR	APR	MAY	JUN	JUL	AUG	SEP	OCT	NOV	DEC
20	0	1625	1829	1975	2002	1905	1785	1826	1817	1724	1642	1640	1542
30	0	1748	1913	1990	1933	1784	1651	1698	1733	1705	1690	1761	1672
40	0	1828	1960	1956	1822	1628	1488	1539	1613	1648	1699	1818	1760
50	0	1862	1938	1877	1672	1444	1302	1354	1461	1553	1667	1840	1803
60	0	1848	1879	1753	1487	1237	1101	1152	1282	1426	1596	1816	1800
70	0	1785	1774	1589	1274	1016	893	939	1083	1288	1469	1746	1751
80	0	1683	1626	1390	1040	793	693	730	872	1085	1347	1633	1658
90	0	1539	1444	1167	801	594	534	553	666	888	1180	1483	1527
20	15	1610	1816	1969	2004	1911	1792	1833	1821	1722	1633	1627	1528
30	15	1727	1895	1981	1940	1795	1663	1710	1741	1704	1677	1731	1651
40	15	1801	1926	1948	1835	1647	1508	1557	1627	1649	1682	1793	1733
50	15	1830	1910	1869	1693	1471	1328	1381	1483	1558	1647	1810	1771
60	15	1812	1845	1747	1519	1273	1135	1187	1313	1436	1574	1762	1764
70	15	1749	1740	1587	1319	1063	935	984	1126	1285	1465	1709	1712
80	15	1641	1590	1394	1101	852	743	783	928	1112	1323	1594	1617
90	15	1497	1408	1180	884	680	579	608	737	928	1157	1444	1485
20	30	1569	1783	1951	2005	1926	1811	1850	1828	1714	1609	1586	1486
30	30	1667	1848	1960	1949	1825	1697	1742	1758	1697	1645	1676	1590
40	30	1725	1869	1927	1857	1694	1556	1607	1657	1646	1645	1722	1655
50	30	1739	1848	1853	1730	1539	1400	1451	1530	1583	1607	1727	1678
60	30	1710	1780	1739	1575	1365	1229	1280	1379	1451	1534	1689	1659
70	30	1640	1672	1592	1398	1181	1051	1100	1214	1314	1429	1611	1599
80	30	1529	1528	1417	1207	996	876	922	1040	1158	1295	1494	1499
90	30	1385	1356	1227	1017	823	724	762	873	996	1142	1346	1366
20	45	1508	1733	1922	2003	1944	1835	1871	1834	1699	1574	1532	1424
30	45	1582	1781	1926	1955	1859	1739	1780	1774	1682	1599	1597	1502
40	45	1620	1790	1893	1874	1747	1622	1666	1687	1635	1591	1627	1545
50	45	1620	1761	1823	1764	1614	1486	1532	1576	1559	1562	1619	1553
60	45	1583	1695	1721	1628	1464	1337	1383	1445	1459	1482	1576	1524
70	45	1511	1594	1589	1472	1302	1182	1228	1299	1337	1385	1496	1460
80	45	1408	1464	1434	1304	1137	1026	1067	1145	1199	1264	1389	1363
90	45	1275	1312	1266	1135	979	881	917	994	1054	1128	1256	1241

Solar Insolation Data
PENSACOLA, FLORIDA

PENSACOLA	FL	30.28											
		JAN	FEB	MAR	APR	MAY	JUN	JUL	AUG	SEP	OCT	NOV	DEC	
HORIZONTAL RAD.		921	1183	1493	1876	2071	2094	1979	1876	1585	1452	1024	825	(BTU/DAY-FT2)
AVE. TEMP.		51.8	53.6	59.0	68.0	73.4	78.8	80.8	80.6	77.0	69.8	59.0	53.6	(F)
DEGREE-DAYS		427.	323.	211.	37.	0.	0.	0.	0.	0.	32.	189.	359.	(F-DAYS)

AVERAGE DAILY RADIATION ON TILTED SURFACES (BTU/DAY-FT2)

SLOPE	AZIMUTH	JAN	FEB	MAR	APR	MAY	JUN	JUL	AUG	SEP	OCT	NOV	DEC
20	0	1200	1431	1656	1912	1978	1943	1862	1858	1697	1731	1317	1094
30	0	1299	1506	1681	1866	1871	1813	1750	1789	1695	1810	1418	1192
40	0	1366	1545	1667	1779	1728	1650	1605	1683	1655	1844	1465	1260
50	0	1400	1547	1615	1653	1552	1460	1433	1543	1576	1833	1516	1298
60	0	1399	1512	1526	1493	1350	1250	1239	1373	1465	1777	1507	1304
70	0	1364	1441	1402	1303	1130	1029	1031	1160	1321	1678	1462	1277
80	0	1295	1336	1248	1091	902	808	821	970	1150	1539	1382	1219
90	0	1197	1204	1073	869	686	613	627	758	961	1368	1270	1133
20	15	1168	1420	1649	1913	1983	1949	1867	1860	1694	1720	1306	1064
30	15	1283	1491	1673	1870	1861	1824	1780	1796	1693	1793	1402	1177
40	15	1346	1526	1656	1788	1744	1668	1621	1695	1654	1823	1463	1241
50	15	1376	1524	1606	1670	1576	1486	1456	1562	1660	1808	1489	1275
60	15	1372	1486	1517	1518	1383	1284	1269	1400	1472	1749	1478	1277
70	15	1334	1413	1396	1339	1173	1071	1070	1217	1334	1648	1431	1249
80	15	1264	1307	1248	1139	955	858	868	1019	1171	1508	1348	1189
90	15	1165	1174	1076	933	748	666	680	821	992	1336	1236	1103
20	30	1158	1393	1632	1911	1995	1966	1881	1864	1883	1689	1273	1054
30	30	1237	1452	1652	1874	1908	1856	1787	1808	1881	1752	1354	1132
40	30	1287	1478	1636	1801	1786	1718	1664	1720	1846	1773	1402	1184
50	30	1306	1469	1585	1695	1638	1556	1517	1602	1677	1753	1417	1207
60	30	1293	1427	1502	1560	1467	1376	1352	1458	1477	1693	1398	1201
70	30	1249	1353	1389	1399	1281	1185	1174	1295	1351	1594	1344	1166
80	30	1176	1248	1250	1222	1066	994	993	1119	1203	1460	1259	1103
90	30	1077	1121	1098	1040	903	817	822	946	1043	1300	1148	1016
20	45	1111	1362	1605	1903	2008	1988	1898	1865	1663	1644	1224	1008
30	45	1171	1396	1618	1871	1933	1896	1818	1817	1659	1691	1286	1068
40	45	1206	1411	1600	1807	1831	1779	1714	1741	1626	1702	1319	1104
50	45	1212	1396	1551	1714	1703	1640	1587	1638	1562	1678	1322	1114
60	45	1192	1362	1474	1594	1555	1484	1443	1512	1472	1618	1296	1100
70	45	1145	1281	1371	1453	1391	1317	1287	1368	1359	1525	1241	1060
80	45	1073	1184	1245	1295	1220	1146	1126	1212	1226	1404	1160	997
90	45	981	1069	1109	1133	1053	983	969	1055	1084	1261	1057	915

Solar Insolation Data
TALLAHASSEE, FLORIDA

TALLAHASSEE	FL	30.26											
		JAN	FEB	MAR	APR	MAY	JUN	JUL	AUG	SEP	OCT	NOV	DEC	
HORIZONTAL RAD.		909	1145	1557	1778	2018	1752	2003	1977	1561	1299	1340	1145	(BTU/DAY-FT2)
AVE. TEMP.		51.8	53.6	60.8	66.2	73.4	78.8	80.6	80.6	77.0	68.0	59.0	53.6	(F)
DEGREE-DAYS		375.	266.	202.	36.	0.	0.	0.	0.	0.	26.	198.	360.	(F-DAYS)
AVERAGE DAILY RADIATION ON TILTED SURFACES (BTU/DAY-FT2)														
SLOPE	AZIMUTH	JAN	FEB	MAR	APR	MAY	JUN	JUL	AUG	SEP	OCT	NOV	DEC	
20	0	1182	1379	1732	1809	1927	1635	1884	1959	1669	1530	1802	1611	
30	0	1278	1449	1761	1765	1824	1532	1769	1886	1668	1593	1967	1786	
40	0	1343	1485	1747	1683	1685	1403	1622	1773	1628	1618	2081	1914	
50	0	1376	1486	1693	1565	1515	1252	1448	1623	1552	1604	2140	1992	
60	0	1374	1451	1600	1415	1320	1084	1251	1442	1441	1553	2143	2017	
70	0	1339	1383	1471	1238	1107	907	1040	1238	1300	1465	2089	1988	
80	0	1271	1282	1309	1039	886	730	826	1012	1132	1342	1980	1907	
90	0	1176	1154	1123	832	676	571	630	786	946	1193	1824	1778	
20	15	1171	1369	1728	1810	1932	1640	1889	1961	1666	1520	1784	1594	
30	15	1262	1435	1752	1769	1833	1541	1780	1893	1665	1579	1941	1760	
40	15	1323	1467	1736	1692	1700	1417	1639	1786	1627	1600	2047	1881	
50	15	1352	1464	1684	1580	1538	1271	1471	1644	1554	1583	2100	1952	
60	15	1347	1427	1592	1438	1351	1108	1282	1472	1447	1529	2098	1972	
70	15	1310	1356	1464	1270	1147	936	1080	1276	1312	1439	2040	1940	
80	15	1241	1254	1306	1083	937	767	874	1066	1151	1316	1929	1856	
90	15	1144	1126	1126	890	736	610	684	854	977	1167	1771	1727	
20	30	1140	1343	1708	1808	1943	1653	1903	1966	1656	1496	1733	1542	
30	30	1217	1398	1730	1773	1857	1565	1807	1907	1654	1544	1866	1685	
40	30	1266	1422	1714	1704	1741	1464	1683	1813	1618	1559	1952	1784	
50	30	1284	1412	1682	1604	1597	1324	1534	1667	1551	1538	1988	1837	
60	30	1271	1371	1575	1476	1432	1178	1366	1535	1453	1482	1972	1842	
70	30	1227	1299	1456	1326	1251	1024	1186	1361	1328	1394	1906	1798	
80	30	1155	1196	1311	1159	1064	868	1002	1174	1183	1276	1790	1708	
90	30	1057	1076	1148	988	885	723	829	989	1026	1137	1634	1577	
20	45	1095	1304	1678	1802	1956	1669	1920	1967	1637	1457	1657	1464	
30	45	1163	1345	1693	1770	1883	1595	1839	1916	1633	1494	1760	1575	
40	45	1186	1359	1675	1709	1784	1499	1733	1835	1599	1500	1822	1646	
50	45	1192	1343	1625	1621	1660	1386	1605	1727	1537	1475	1840	1678	
60	45	1172	1300	1545	1508	1516	1259	1459	1593	1448	1420	1814	1668	
70	45	1126	1231	1437	1374	1357	1122	1301	1441	1336	1337	1744	1617	
80	45	1055	1138	1307	1226	1191	982	1137	1275	1206	1230	1635	1527	
90	45	964	1027	1162	1074	1028	847	979	1109	1066	1105	1493	1405	

Solar Insolation Data
TAMPA, FLORIDA

TAMPA	FL	27.58											
	JAN	FEB	MAR	APR	MAY	JUN	JUL	AUG	SEP	OCT	NOV	DEC	
HORIZONTAL RAD.	1204	1439	1756	2006	2191	2110	1962	1822	1671	1491	1314	1112	(BTU/DAY-FT2)
AVE. TEMP.	60.8	60.8	66.2	69.8	75.2	78.8	80.6	80.6	78.8	73.4	66.2	60.8	(F)
DEGREE-DAYS	202.	148.	102.	0.	0.	0.	0.	0.	0.	0.	60.	171.	(F-DAYS)

AVERAGE DAILY RADIATION ON TILTED SURFACES (BTU/DAY-FT2)

SLOPE	AZIMUTH	JAN	FEB	MAR	APR	MAY	JUN	JUL	AUG	SEP	OCT	NOV	DEC
20	0	1579	1739	1939	2024	2068	1937	1828	1785	1770	1743	1698	1490
30	0	1711	1827	1963	1964	1942	1795	1708	1710	1759	1808	1829	1626
40	0	1799	1870	1939	1860	1778	1622	1557	1600	1708	1830	1913	1722
50	0	1842	1868	1870	1716	1581	1423	1360	1458	1618	1807	1949	1773
60	0	1838	1819	1756	1536	1358	1205	1163	1289	1493	1740	1935	1779
70	0	1786	1726	1602	1325	1118	979	974	1099	1335	1632	1872	1740
80	0	1690	1591	1411	1092	873	758	766	895	1151	1485	1761	1655
90	0	1554	1422	1196	852	648	572	582	693	949	1309	1609	1532
20	15	1564	1726	1932	2025	2073	1944	1834	1788	1767	1733	1682	1475
30	15	1689	1809	1954	1970	1954	1808	1719	1717	1757	1793	1806	1605
40	15	1772	1847	1929	1872	1798	1642	1574	1613	1708	1810	1885	1694
50	15	1809	1840	1860	1736	1610	1451	1404	1478	1622	1784	1915	1741
60	15	1800	1788	1748	1568	1397	1242	1215	1317	1502	1714	1897	1742
70	15	1746	1692	1597	1368	1168	1024	1016	1137	1351	1604	1830	1699
80	15	1648	1565	1412	1150	936	811	816	946	1176	1457	1717	1613
90	15	1511	1385	1204	929	720	625	636	758	987	1281	1565	1489
20	30	1522	1693	1913	2026	2089	1963	1849	1794	1758	1705	1639	1433
30	30	1627	1762	1931	1977	1985	1844	1748	1732	1748	1755	1744	1543
40	30	1693	1790	1906	1891	1848	1697	1620	1639	1703	1765	1805	1615
50	30	1716	1775	1840	1769	1683	1528	1470	1519	1623	1735	1822	1646
60	30	1696	1718	1735	1618	1496	1342	1302	1377	1513	1665	1792	1635
70	30	1633	1621	1595	1442	1295	1149	1125	1217	1376	1558	1719	1584
80	30	1531	1489	1427	1250	1090	957	947	1048	1217	1419	1603	1492
90	30	1394	1328	1241	1057	899	785	784	883	1050	1256	1452	1367
20	45	1459	1643	1882	2021	2106	1989	1868	1797	1740	1663	1575	1369
30	45	1539	1695	1893	1978	2019	1888	1783	1744	1729	1700	1655	1453
40	45	1584	1710	1867	1903	1903	1764	1674	1664	1687	1701	1697	1503
50	45	1592	1688	1805	1797	1762	1619	1545	1559	1615	1668	1699	1517
60	45	1562	1631	1709	1664	1600	1459	1399	1434	1515	1600	1662	1495
70	45	1497	1539	1584	1510	1425	1289	1244	1293	1393	1501	1588	1439
80	45	1399	1418	1434	1341	1244	1119	1085	1143	1252	1375	1478	1349
90	45	1274	1275	1270	1168	1070	958	933	994	1103	1230	1342	1233

SUMMARY OF

PERTINENT COLD WEATHER DATA FOR

NINE FLORIDA CITIES

The following summary of weather data for nine Florida cities includes those inputs required for many solar pool heating calculations: wind speed (mph), wind direction, average temperatures for both 24 hour and daytime (solar collection) periods (°F) and horizontal radiation data ($Btu/ft^2 \cdot day$). Heating degree days (for a 65°F base) are included for comparative purposes The monthly listings progress from the coldest to the warmest months of the year during which the 24 hour average temperature is less than 75°F

APALACHACOL, FLORIDA

Coldest Month	Wind (mph)	Degree Days	Avg. Temp. 24 Hrs	D/T	Horizontal Radiation
Jan.	8.4 N	347	53.6	58.6	1078
Dec.	8.0 N	319	55.4	60.4	972
Feb.	8.8 N	260	55.4	60.4	1340
Mar.	9.0 SE	180	59.0	64.0	1623
Nov.	8.1 N	153	60.8	65.8	1226
April	8.7 SE	33	66.2	71.2	2025
Oct.	8.1 NW	16	69.8	74.8	1539
May	7.8 SE	0	73.4	78.4	2242

GAINESVILLE, FLA

Coldest Month	Wind (mph)	Degree Days	Avg. Temp. 24 Hrs	D/T	Horizontal Radiation
Jan.		332	55.4	60.4	1023
Dec.	NOT	310	57.2	62.2	935
Feb.	AVAILABLE	246	57.2	62.2	1351
Mar.		174	62.6	67.6	1638
Nov.		144	62.6	67.6	1170
April		21	69.8	74.8	1984
Oct.		12	71.6	76.6	1355
May		0	75.2	80.2	2157

JACKSONVILLE, FL.

Coldest Month	Wind (mph)	Degree Days	Avg. Temp. 24 Hrs	D/T	Horizontal Radiation
Jan.	8.4 NW	348	53.6	58.6	984
Dec.	8.2 NW	317	53.6	58.6	847
Feb.	9.4 SW	282	55.4	60.4	1275
Mar.	9.4 NW	176	60.8	65.8	1559
Nov.	8.1 NW	161	60.8	65.8	1010
April	9.15 E	24	68.0	73.0	1894
Oct.	3.6 NE	19	69.8	74.8	1220
May	3.6 SW	0	73.0	78.0	2049

KEY WEST, FL

Coldest Month	Wind (mph)	Degree Day	Avg. Temp. 24 hrs.	D/T	Horizontal Radiation
Feb.	12.0 SW	25	69.8	74.8	1511
Dec.	12.0 NE	18	69.8	74.8	1076
Jan.	12.0 NE	16	69.8	74.8	1205
Mar.	12.5 SW	5	73.4	78.4	1806
Nov.	12.0 NE	0	73.4	78.4	1223

MIAMI, FL.

Coldest Month	Wind (mph)	Degree Day	Avg. Temp. 24 hrs	D/T	Horizontal Radiation
Jan.	9.4 NWN	74	66.2	71.2	1263
Dec.	9.1 N	65	68.0	73.0	1174
Feb.	10.1 SE	56	66.2	71.2	1531
Mar.	10.4 SE	19	69.8	74.8	1808
Nov.	9.5 N	0	71.6	76.6	1303
April	10.7 SE	0	73.4	78.4	2003

ORLANDO, FL

Coldest Month	Wind mph)	Degree Day	Avg. Temp. 24 hrs.	D/T	Horizontal Radiation
Jan.	1.0 NNE	197	60.3	65.3	1096
Feb.	9.8 S	184	61.5	66.5	1218
Dec.	9.7 NNE	170	61.5	66.5	1074
Mar.	1.9 S	94	65.9	70.9	1520
Nov.	3.7 N	75	66.6	71.6	1155
April	9.5 SE	11	71.3	76.3	1708
Oct.	8.7 N	0	74.3	79.3	1351

PENSACOLA, FL.

Coldest Month	Wind (mph)	Degree Day	Avg. Temp. 24 hrs.	D/T	Horizontal Radiation
Jan.	.0	427	51.8	56.8	921
Dec.	.0	359	53.6	58.6	825
Feb.	.4	323	53.6	58.6	1183
Nov.	.2	189	59.0	64.0	1024
Mar.	.7	211	59.0	64.0	1493
April	.3	37	68.0	73.0	1876
Oct.	.0	32	69.8	74.8	1452
May	5	0	73.4	78.4	2071

TALLAHASSEE, FL

Coldest Month	Wind (mph)	Degree Day	Avg. Temp. 24 hrs.	D/T	Horizontal Radiation
Jan.	.7 N	375	51.8	55.8	909
Dec.	.9 N	360	53.6	58.6	1145
Feb.	.9 S	286	53.6	58.6	1145
Nov.	6.6 N	198	59.0	64.0	1340
Mar.	8.4 S	202	60.8	65.8	1557
April	7.5 S	36	66.2	71.2	1778
Oct.	6.9 N	28	68.0	73.0	1299
May	6.8 E	0	73.4	78.4	2018

TAMPA, FL.

Coldest Month	Wind (mph)	Degree Day	Avg. Temp. 24 hrs.	D/T	Horizontal Radiation
Jan.	8.9 N	202	60.8	65.8	1204
Dec.	10.0 N	171	60.8	65.8	1112
Feb.	9.5 E	148	60.8	65.8	1439
Mar.	9.8 S	102	66.2	71.2	1756
Nov.	10.0 E-NE	60	66.2	71.2	1314
April	9.6 E-NE	0	69.8	74.8	2006
Oct.	10.1 E-NE	0	73.4	78.4	1491

APPENDIX F

CALCULATOR PROGRAMS

calculator programs in Appendix F may be used to rate collectors which first order thermal performance equations are available. Appropriate monthly pool temperatures, (T_i), ambient temperatures (T_a) and insolation rates for specific months and locations may be entered in programs as indicated and non-standard day ratings similiar to FSEC standard day ratings calculated. If wind speed corrections are called for the slope term may be multiplied by the following factors before being entered

Wind Speed Over Collector Surface (mph)	2nd Term Multiplier
	1.18
10	1.61
15	2.04

Program "A" for the HP 15 C is basically identical to that which FSEC uses to rate collectors for standard Florida day conditions except that it makes use of first order rather than second order thermal performance equations. The shorter "looped" programs yield results which are within one percent or so of the longer version. They require slightly longer running time on the calculators but are far easier to enter and de-bug.

The following entries and outputs will allow de-bugging of the programs

INPUTS	TI	OUTPUTS (Btu/ft^2·day)	
R_1 = 66*	LBL A 66	HP 15 C Program "A"	502.86
80	LBL B 80		
1112	LBL C 1112	HP 15 C Program "B"	501.63
= 3 3*	LBL D 3.6		
= 81	LBL E .81	HP 11 C Program	501.63
R_6 = 6			
R_7 = 01**		HP 55 Program	501.63
R_8 = 0		TI 59 Program	501.63
R_9 = 0		Δ = .2%	
R_0 = 0			
$R_{.1}$ = 0			

* (-66) For HP 55 program

** (1) For HP 55 program

SOLAR POOL HEATER SIZING PROGRAM "A"

FOR HP 15 C

BY

Doug Root, FSEC Educational Consultant

TO LOAD PROGRAM A (IN PROGRAM MODE) 228 STEPS

000	g P/R	031-33	.03	064	RCL R_8
001	F LBL A	034	x	065	x
002	RCL R_1	035	STO R_8	066	g Test 1
003	CHS	036	÷	067	STO + R_9
004	6	037	RCL R_4	068	RCL R_1
005	+	038	x	069	CHS
006	RCL R_2	039	CHS	070	2
007	+	040	RCL R_5	071	+
008	RCL R_3	041	+	072	RCL R_2
009-11	.01	042	RCL R_8	073	+
012	x	043	x	074	RCL R_3
013	STO R_8	044	g Test 1	075-77	.07
014	÷	045	STO + R_9	078	x
015	RCL R_4	046	RCL R_1	079	STO R_8
016	x	047	CHS	080	÷
017	CHS	048	4	081	RCL R_4
018	RCL R_5	049	+	082	x
019	+	050	RCL R_2	083	CHS
020	RCL R_8	051	+	084	RCL R_5
021	x	052	RCL R_3	085	+
022	g Test 1	053-55	.05	086	RCL R_8
023	STO R_9	056	x	087	x
024	RCL R_1	057	STO R_8	088	g Test 1
025	CHS	058	÷	089	STO + R_9
026	4	059	RCL R_4	090	RCL R_1
027	+	060	x	091	CHS
028	RCL R_2	061	CHS	092	RCL R_2
029	+	062	RCL R_5	093	+
030	RCL R_3	063	+	094	RCL R_3

.095-97	09	135.	+	175.	CHS
.098	x	136.	RCL R_3	176.	3
.099	STO R_8	137-39.	.13	177.	
100.	÷	140.	x	178.	RCL R_2
101.	RCL R_4	141.	STO R_8	179.	+
102.	x	142.	÷	180.	RCL R_3
103.	CHS	143.	RCL R_4	181-183.	.17
104.	RCL R_5	144.	x	184.	x
105.	+	145.	CHS	185.	STO R_8
106.	RCL R_8	146.	RCL R_5	186.	÷
107.	x	147.	+	187.	RCL R_4
108.	g Test 1	148.	RCL R_8	188.	x
109.	STO + R_9	149.	x	189.	CHS
110.	RCL R_1	150.	g Test 1	190.	RCL R_5
111.	CHS	151.	STO + R_9	191.	+
112.	RCL R_2	152.	RCL R_1	192.	RCL R_8
113.	+	153.	CHS	193.	x
114.	RCL R_3	154.	3	194.	g Test 1
115-17.	.11	155.		195.	STO + R_9
118.	x	156.	RCL R_2	196.	RCL R_1
119.	STO R_8	157.	+	197.	CHS
120.	÷	158.	RCL R_3	198.	5
121.	RCL R_4	159-61.	.15	199.	
122.	x	162.	x	200.	RCL R_2
123.	CHS	163.	STO R_8	201.	+
124.	RCL R_5	164.	÷	202.	RCL R_3
125.	+	165.	RCL R_4	203-205.	.19
126.	RCL R_8	166.	x	206.	x
127.	x	167.	CHS	207.	STOR$_8$
128.	g Test 1	168.	RCL R_5	208.	÷
129.	STO + R_9	169.	+	209.	RCL R_4
130.	RCL R_1	170.	RCL R_8	210.	x
131.	CHS	171.	x	211.	CHS
132.	1	172.	g Test 1	212.	RCL R_5
133.		173.	STO + R_9	213.	
134.	RCL R_2	174.	RCL R_1	214.	RCL R_8

215.	x
216.	g Test 1
217.	STO + R_9
218.	6
219.	STO R_6
220-22	.01
223	STO R_7
224	RCL R_9
225	0
226	STO R_9
227	R
228	g RTN

TO RUN PROGRAM "A" (20 sec.)

REGISTER	KEY IN
1	Ambient Temp. (°F)
2	Pool Temp. (°F)
3	Solar Intensity (Btu/ft^2 day)
4	1st order slope term (positive value)
5	1st order intercept term
9	0
f A	Runs Program

NOTE: After the first run, the registers do not need to be rekeyed except for desired changes. Program "A" automatically clears the accumulating memory (register 9) and the contents of registers 1-5 are not altered by the running of the program.

SOLAR POOL HEATER SIZING PROGRAM "B"

FOR HP 15 C

BY

Doug Root, FSEC Educational Consultant

TO LOAD PROGRAM B (IN PROGRAM MODE) 46 Steps

001	f LBL B	032-3	.2
002	RCL R_1	034	g TEST 7
003	CHS	035	GTO f B
004	RCL R_6	036	6
005	+	037	STO R_6
006	RCL R_2	038-40	.01
007	+	041	STO R_7
008	RCL R_3	042	RCL R_0
009	RCL R_7	043	0
010	x	044	STO R_0
011	STO R_8	045	R↓
012	÷	046	g RTN
013	RCL R_4		
014	x		
015	CHS		
016	RCL R_5		
017	+		
018	RCL R_8		
019	x		
020	g TEST :		
021	STO + $R_{(}$		
022-5	1.23		
026	STO - R_6		
027-9	.02		
030	STO + R_7		
031	RCL R_7		

TO RUN PROGRAM "B" (35 Sec.)

REGISTER	KEY IN
1	Ambient Temp. (°F)
2	Pool Temp. (°F)
3	Solar Intensity (Btu/Ft^2·day)
4	1st order slope term (Positive value)
5	1st order intercept term
6	6
7	.01
8	0
0	0
f B	Runs Program

NOTE: After the first run it is not necessary to rekey the registers unless changes are desired in weather data or collector performance data The program automatically resets the register inputs. If registers are manually cleared, reinput data.

SOLAR POOL HEATER SIZING PROGRAM

FOR HP 11 C

BY

Doug Root and Jim Huggins, FSEC

TO LOAD PROGRAM (IN PROGRAM MODE) 47 Steps

001	f LBL A	032-33	.2
002	RCL R	034	X Y (X ↔ Y)
003	CHS	035	X ≤ Y
00	4RCL I_6	036	GTO f A
005	+	037	6
006	RCL R	038	STO R_6
007	+	039-41	
008	RCL R	042	STO R_7
009	RCL R	043	RCL R9
010	x	044	0
011	STO R	045	STO R_9
012	÷	046	R↓
013	RCL R	047	g RTN
014	x		
015	CHS		
016	RCL R		
017	+		
018	RCL R		
019	x		
020	X > 0		
021	STO + R_9		
022-25	1.23		
026	STO - R_6		
027-29	.02		
030	STO + R_7		
031	RCL R		

TO RUN PROGRAM (36 sec.)

REGISTER	ENTER
R_1	Ambient Temp. (°F)
R_2	Pool Temp. (°F)
R_3	Insolation Rate
R_4	Slope Term (Positive Value)
R_5	Intercept Term
R_6	6
R_7	.01
R_8	0
R_9	0

NOTE: After the first run it is not necessary to rekey the registers unless changes are desired in weather data or collector performance data The program automatically resets the register inputs. If the registers are manually cleared, reinput data.

SOLAR POOL HEATER SIZING PROGRAM

FOR HP 55

Doug Root, FSEC Educational Consultant

TO LOAD PROGRAM (IN PROGRAM MODE) 49 STEPS

001	RCL	031	RCL
002	R_1	032	R_9
003	RCL	033	STO
004	R_6	034	
005	+	035	R_6
006	RCL	036	2
007	R_2	037	STO
008	+	038	+
009	RCL	039	R_7
010	R_3	040	RCL
011	RCL	041	R_7
012	R_7	042	2
013	x	043	0
014	STO	044	X ↔ Y
015	R_8	045	f
16	÷	046	X ≤ Y
017	RCL	047	RCL
018	R_4	048	.
019	x	049	1
020	RCL		
021	R_5		
022	+		
023	RCL		
024	R_8		
025	x		
026	0		
027	X ↔ Y		
028	f		
029	X ≤) 31		
030	Σ +		

REGISTER	KEY IN
1	(-)Ambient Temp. (°F)
2	Pool Temp. (°F)
3	Solar Intensity ÷ 100 (Btu/ft² · day)
4	(-)1st order slope term
5	1st order intercept term
6	6
7	1
8	0
9	1.23
.1	0

R/S RUNS PROGRAM

NOTE: After each run values for registers 6-9 and $R_{.1}$ must be reentered.

SOLAR POOL HEATER SIZING PROGRAM

FOR TI-59

Doug Root and Mukesh Khattar, FSEC

TO LOAD PROGRAM (IN PROGRAM MODE) 107 STEPS

000	76 LBL	031	00 0	062	65 X
001	11 A	032	01 1	063	43 RCL
002	42 STO	033	42 STO	064	04 04
003	01 01	034	07 07	065	95 =
004	91 R/S	035	00 0	066	94 +/-
005	76 LBL	036	42 STO	067	85 +
006	12 B	037	08 08	068	43 RCL
007	42 STO	038	42 STO	069	08 08
008	02 02	039	09 09	070	95 =
009	91 R/S	040	76 LBL	071	29 CP
010	76 LBL	041	17 B'	072	32 X ↔ T
011	13 C	042	43 RCL	073	77 GE
012	42 STO	043	07 07	074	18 C'
013	03 03	044	65 X	075	32 X ↔ T
014	91 R/S	045	43 RCL	076	44 SUM
015	76 LBL	046	03 03	077	09 09
016	14 D	047	65 X	078	76 LBL
017	42 STO	048	43 RCL	079	18 C'
018	04 04	049	05 05	080	43 RCL
019	91 R/S	050	95 =	081	06 06
020	76 LBL	051	42 STO	082	75 -
021	15 E	052	08 08	083	01 1
022	42 STO	053	43 RCL	084	93 .
023	05 05	054	02 02	085	02 2
024	91 R/S	055	85 +	086	03 3
025	76 LBL	056	43 RCL	087	95 =
026	16 A'	057	06 06	088	42 STO
027	06 6	058	75 -	089	06 06
028	42 STO	059	43 RCL	090	43 RCL
029	06 06	060	01 01	091	07 07
030	93 .	061	95 =	092	85 +

093	93 .	101	93 .
094	00 0	102	02 2
095	02 2	103	77 GE
096	95 =	104	17 B'
097	42 STO	105	43 RCL
098	07 07	106	09 09
099	29 CP	107	91 R/S
100	32 X ↔ T		

LABELS	KEY IN
Label A	Ambient Air Temperature, T_a (°F)
Label B	Pool WaterTemp., T_p (°F)
Label C	Insolation Rate H(Btu/ft² · day)
Label D	Slope, $F_R U_L$ (Btu/ft² · °F)
Label E	Intercept, $F_R(\tau\alpha)_n$

Press Label A' to run the program. To rerun the program with new values you need to input only those values which change and press Label A'

MATHEMATICAL EQUATION

$$\text{OUTPUT} = \sum_{n=1}^{9} [H(.01 + n*.02)\, F_R(\tau\alpha)_n - F_R U_L\, (T_p + 6 - 1.23*n - T_a)]^+$$

The superscript + indicates that only positive values are included in the summation.

COMPUTER PROGRAMING DATA

The meth

set out in Fortran by Dr. Magdy Girgis and is available upon request to solar designers, installation contractors and other interested parties who have purchased "Designing and Installing Commercial Solar Pool Heating Systems." Please send your requests along with a photocopy of the title page of this document to:

Doug Root, Educational Consultant
Florida Solar Energy Center
300 State Road 401
Cape Canaveral, Florida 32920

APPENDIX G

Tabulated Heat Loss Factors For Swimming Pools In Six Florida Cities

The tables on pages G-3 through G-8 may be used to evaluate heat losses from swimming pools which are exposed to direct sunlight approximately eight hours per day or for approximately 60% of that period (separate Tables). The column designations are as follows

Month

Pool Temp.: Pool Temperature, °F

BARE: No Windbreaks or any kind close to pool--an unusual situation (Airport wind speed has been reduced to ½ its reported value in calculations.)

Windbreak--Privacy fences, shrub lines, adjacent buildings, etc (Aiport wind speed has been reduced to ¼ of its reported value in calculations.)

A transparent cover which prevents evaporation of water from the pool's surface is kept in place sixteen hours per day

SCR: Screen Room (insolation absored by pool has been reduced to 60% of the value used for an unshaded pool.

C+WB Cover plus wind break

S+WB Screen room plus wind break

S+C Screen room plus cover

ALL: Screen Room, Cover, Windbreak

values given are in millions of Btu/100ft^2 of pool area To estimate the monthly losses (in MM Btu/month) multiply the appropriate factors by the pool area in hundreds of ft^2 (-) Indicates an energy gain by pool during period

EXAMPLE

What is the January heating load for a 650 Ft^2 pool in Miami, Florida if it is unshaded five hours a day and surrounded by a semiporous security fence? It is maintained at 78°F.

ANSWER:

4.23 x 6.5 = 27.5 million Btu

pool is unshaded for about 60% of an eight hour period during which it may be expected to collect energy from the sun striking its surface Therefore the fourth Table on Page G-4 is used

LOCATION - JACKSONVILLE
100% Solar Exposure

SWIMMING POOL HEAT LOSSES
IN MILLONS OF BTU/100 FT SQ

MO	POOL TEMP	BARE	WB	COV	SCR	C&WB	S&WB	S&C	ALL
1	78.	8.21	5.82	4.02	9.02	2.80	6.63	4.83	4.39
2	78.	8.04	5.40	3.53	9.09	2.21	6.45	4.57	3.92
3	78.	6.08	3.72	1.87	7.45	0.74	5.09	3.24	2.37
4	78.	3.31	1.49	-0.23	4.98	-1.03	3.16	1.44	0.40
5	78.	0.79	-0.42	-1.84	2.55	-2.31	1.34	-0.08	-1.13
10	78.	2.73	1.47	0.25	3.83	-0.31	2.57	1.35	0.64
11	78.	5.93	4.08	2.50	6.83	1.59	4.98	3.40	2.85
12	78.	7.95	5.70	3.96	8.69	2.81	6.44	4.70	4.28
MO	POOL TEMP	BARE	WB	COV	SCR	C&WB	S&WB	S&C	ALL
1	80.	9.13	6.52	4.53	9.94	3.19	7.33	5.34	4.82
2	80.	9.02	6.12	4.06	10.07	2.61	7.17	5.10	4.37
3	80.	7.06	4.44	2.40	8.43	1.14	5.81	3.77	2.82
4	80.	4.27	2.20	0.30	5.94	-0.63	3.87	1.97	0.84
5	80.	1.73	0.28	-1.33	3.49	-1.92	2.04	0.43	-0.70
10	80.	3.67	2.17	0.76	4.77	0.08	3.27	1.86	1.07
11	80.	6.84	4.77	3.00	7.74	1.98	5.66	3.89	3.28
12	80.	8.87	6.39	4.46	9.60	3.20	7.13	5.20	4.71
MO	POOL TEMP	BARE	WB	COV	SCR	C&WB	S&WB	S&C	ALL
1	82.	10.10	7.24	5.04	10.91	3.59	8.05	5.85	5.25
2	82.	10.04	6.87	4.60	11.09	3.02	7.92	5.65	4.82
3	82.	8.09	5.20	2.94	9.46	1.56	6.57	4.31	3.27
4	82.	5.28	2.94	0.83	6.95	-0.22	4.61	2.50	1.29
5	82.	2.71	1.01	-0.81	4.47	-1.52	2.77	0.95	-0.26
6	82.	0.46	-0.63	-1.96	2.15	-2.37	1.07	-0.27	-1.28
9	82.	1.08	0.12	-1.02	2.38	-1.41	1.41	0.27	-0.52
10	82.	4.64	2.90	1.28	5.75	0.48	4.00	2.38	1.51
11	82.	7.79	5.48	3.51	8.68	2.37	6.38	4.40	3.71
12	82.	9.82	7.11	4.97	10.55	3.60	7.84	5.71	5.14

LOCATION - JACKSONVILLE
60% Solar Exposure

SWIMMING POOL HEAT LOSSES
IN MILLONS OF BTU/100 FT SQ

MO	POOL TEMP	BARE	WB	COV	SCR	C&WB	S&WB	S&C	ALL
1	78.	9.02	6.63	4.83	9.50	3.61	7.12	5.32	4.87
2	78.	9.09	6.45	4.57	9.72	3.25	7.07	5.20	4.54
3	78.	7.45	5.09	3.24	8.28	2.11	5.91	4.06	3.19
4	78.	4.98	3.16	1.44	5.98	0.64	4.16	2.45	1.40
5	78.	2.55	1.34	-0.08	3.61	-0.55	2.39	0.98	-0.08
10	78.	3.83	2.57	1.35	4.49	0.79	3.23	2.01	1.30
11	78.	6.83	4.98	3.40	7.36	2.49	5.51	3.94	3.39
12	78.	8.69	6.44	4.70	9.13	3.55	6.88	5.14	4.73
MO	POOL TEMP	BARE	WB	COV	SCR	C&WB	S&WB	S&C	ALL
1	80.	9.94	7.33	5.34	10.43	4.00	7.81	5.82	5.31
2	80.	10.07	7.17	5.10	10.70	3.66	7.80	5.73	5.00
3	80.	8.43	5.81	3.77	9.26	2.51	6.64	4.59	3.64
4	80.	5.94	3.87	1.97	6.95	1.04	4.87	2.97	1.85
5	80.	3.49	2.04	0.43	4.55	-0.16	3.09	1.49	0.36
10	80.	4.77	3.27	1.86	5.43	1.18	3.93	2.52	1.73
11	80.	7.74	5.66	3.89	8.27	2.87	6.20	4.43	3.82
12	80.	9.60	7.13	5.20	10.04	3.94	7.57	5.64	5.15
MO	POOL TEMP	BARE	WB	COV	SCR	C&WB	S&WB	S&C	ALL
1	82.	10.91	8.05	5.85	11.39	4.40	8.53	6.34	5.74
2	82.	11.09	7.92	5.65	11.72	4.07	8.55	6.28	5.45
3	82.	9.46	6.57	4.31	10.28	2.93	7.39	5.13	4.09
4	82.	6.95	4.61	2.50	7.95	1.45	5.62	3.50	2.29
5	82.	4.47	2.77	0.95	5.52	0.24	3.82	2.01	0.80
6	82.	2.15	1.07	-0.27	3.17	-0.68	2.09	0.75	-0.26
9	82.	2.38	1.41	0.27	3.16	-0.12	2.19	1.05	0.26
10	82.	5.75	4.00	2.38	6.41	1.58	4.66	3.04	2.17
11	82.	8.68	6.38	4.40	9.22	3.27	6.91	4.94	4.25
12	82.	10.55	7.84	5.71	11.00	4.33	8.29	6.15	5.58

LOCATION - MIAMI
100% Solar Exposure

SWIMMING POOL HEAT LOSSES
IN MILLONS OF BTU/100 FT SQ

MO	POOL TEMP	BARE	WB	COV	SCR	C&WB	S&WB	S&C	ALL
1	78.	5.13	3.28	1.67	6.08	0.83	4.23	2.62	1.68
2	78.	4.86	2.86	1.17	6.05	0.28	4.04	2.35	1.28
3	78.	3.25	1.47	-0.15	4.69	-0.89	2.91	1.30	0.11
4	78.	1.56	0.05	-1.47	3.23	-2.04	1.73	0.20	-1.07
11	78.	3.22	1.82	0.44	4.23	-0.15	2.82	1.45	0.49
12	78.	4.68	3.00	1.45	5.60	0.70	3.92	2.37	1.46
MO	POOL TEMP	BARE	WB	COV	SCR	C&WB	S&WB	S&C	ALL
1	80.	6.11	4.01	2.20	7.06	1.24	4.96	3.15	2.14
2	80.	5.88	3.60	1.72	7.07	0.70	4.79	2.90	1.75
3	80.	4.28	2.22	0.41	5.73	-0.47	3.66	1.85	0.58
4	80.	2.61	0.81	-0.90	4.28	-1.62	2.49	0.77	-0.60
10	80.	1.48	0.41	-0.80	2.65	-1.20	1.59	0.38	-0.60
11	80.	4.21	2.54	0.97	5.21	0.26	3.55	1.98	0.94
12	80.	5.65	3.71	1.98	6.57	1.10	4.63	2.89	1.91
MO	POOL TEMP	BARE	WB	COV	SCR	C&WB	S&WB	S&C	ALL
1	82.	7.13	4.76	2.74	8.09	1.65	5.71	3.69	2.59
2	82.	6.95	4.38	2.29	8.13	1.12	5.56	3.47	2.22
3	82.	5.36	3.00	-0.98	6.81	-0.05	4.44	2.43	1.06
4	82.	3.71	1.60	-0.32	5.38	-1.19	3.27	1.35	-0.12
5	82.	1.56	0.14	-1.39	3.22	-1.94	1.80	0.27	-0.90
10	82.	2.50	1.17	-0.25	3.68	-0.78	2.34	0.92	-0.15
11	82.	5.23	3.30	1.52	6.24	0.67	4.30	2.53	1.40
12	82.	6.65	4.46	2.51	7.57	1.51	5.37	3.43	2.35

LOCATION - MIAMI
60% Solar Exposure

SWIMMING POOL HEAT LOSSES
IN MILLONS OF BTU/100 FT SQ

MO	POOL TEMP	BARE	WB	COV	SCR	C&WB	S&WB	S&C	ALL
1	78.	6.08	4.23	2.62	6.65	1.78	4.81	3.19	2.25
2	78.	6.05	4.04	2.35	6.76	1.46	4.75	3.06	1.99
3	78.	4.69	2.91	1.30	5.56	0.55	3.78	2.16	0.98
4	78.	3.23	1.73	0.20	4.23	-0.37	2.73	1.21	-0.07
11	78.	4.23	2.82	1.45	4.83	0.86	3.43	2.05	1.09
12	78.	5.60	3.92	2.37	6.15	1.62	4.47	2.92	2.01
MO	POOL TEMP	BARE	WB	COV	SCR	C&WB	S&WB	S&C	ALL
1	80.	7.06	4.96	3.15	7.64	2.19	5.53	3.72	2.71
2	80.	7.07	4.79	2.90	7.78	1.88	5.50	3.61	2.46
3	80.	5.73	3.66	1.85	6.59	0.97	4.53	2.72	1.45
4	80.	4.28	2.49	0.77	5.29	0.06	3.49	1.77	0.41
10	80.	2.65	1.59	0.38	3.36	-0.03	2.29	1.08	0.10
11	80.	5.21	3.55	1.98	5.82	1.27	4.15	2.59	1.55
12	80.	6.57	4.63	2.89	7.12	2.02	5.18	3.44	2.46
MO	POOL TEMP	BARE	WB	COV	SCR	C&WB	S&WB	S&C	ALL
1	82.	8.09	5.71	3.69	8.66	2.60	6.28	4.27	3.16
2	82.	8.13	5.56	3.47	8.84	2.30	6.27	4.18	2.93
	82.	6.81	4.44	2.43	7.67	1.40	5.31	3.29	1.92
4	82.	5.38	3.27	1.35	6.38	0.49	4.28	2.35	0.89
5	82.	3.22	1.80	0.27	4.21	-0.28	2.79	1.27	0.09
10	82.	3.68	2.34	0.92	4.38	0.39	3.04	1.62	0.55
11	82.	6.24	4.30	2.53	6.84	1.68	4.91	3.13	2.00
12	82.	7.57	5.37	3.43	8.12	2.43	5.92	3.98	2.90

LOCATION - ORLANDO
100% Solar Exposure

SWIMMING POOL HEAT LOSSES
IN MILLONS OF BTU/100 FT SQ

MO	POOL TEMP	BARE	WB	COV	SCR	C&WB	S&WB	S&C	ALL
1	78.	7.08	4.83	3.04	7.98	1.94	5.72	3.94	3.20
2	78.	7.02	4.53	2.61	8.14	1.43	5.65	3.73	2.76
3	78.	5.17	2.93	1.06	6.59	0.05	4.35	2.49	1.35
4	78.	3.04	1.21	-0.66	4.75	-1.41	2.91	1.05	-0.30
10	78.	1.70	0.63	-0.57	2.87	-1.00	1.80	0.60	-0.27
11	78.	4.83	3.11	1.54	5.81	0.75	4.10	2.53	1.70
12	78.	6.61	4.55	2.85	7.44	1.85	5.38	3.68	2.99
MO	POOL TEMP	BARE	WB	COV	SCR	C&WB	S&WB	S&C	ALL
1	80.	8.04	5.54	3.56	8.94	2.34	6.44	4.46	3.64
2	80.	8.03	5.26	3.15	9.14	1.84	6.38	4.27	3.22
3	80.	6.18	3.67	1.61	7.61	0.47	5.09	3.03	1.81
4	80.	4.03	1.93	-0.12	5.74	-1.00	3.64	1.59	0.15
5	80.	1.39	-0.02	-1.68	3.18	-2.22	1.77	0.11	-1.17
10	80.	2.65	1.33	-0.06	3.82	-0.60	2.51	1.12	0.17
11	80.	5.77	3.81	2.05	6.76	1.15	4.80	3.04	2.13
12	80.	7.55	5.25	3.36	8.38	2.25	6.08	4.20	3.42
MO	POOL TEMP	BARE	WB	COV	SCR	C&WB	S&WB	S&C	ALL
1	82.	9.04	6.28	4.09	9.94	2.75	7.18	4.99	4.09
2	82.	9.07	6.03	3.71	10.19	2.26	7.15	4.83	3.68
3	82.	7.24	4.44	2.17	8.66	0.89	5.86	3.59	2.28
4	82.	5.06	2.69	0.42	6.76	-0.58	4.39	2.13	0.61
5	82.	2.38	0.71	-1.15	4.17	-1.81	2.50	0.64	-0.73
10	82.	3.64	2.07	0.47	4.81	-0.20	3.24	1.65	0.62
11	82.	6.75	4.54	2.58	7.74	1.55	5.53	3.56	2.57
12	82.	8.53	5.98	3.89	9.36	2.65	6.81	4.72	3.86

LOCATION - ORLANDO
60% Solar Exposure

SWIMMING POOL HEAT LOSSES
IN MILLONS OF BTU/100 FT SQ

MO	POOL TEMP	BARE	WB	COV	SCR	C&WB	S&WB	S&C	ALL
1	78.	7.98	5.72	3.94	8.52	2.84	6.26	4.48	3.74
2	78.	8.14	5.65	3.73	8.81	2.55	6.32	4.40	3.43
3	78.	6.59	4.35	2.49	7.45	1.48	5.21	3.34	2.20
4	78.	4.75	2.91	1.05	5.78	0.30	3.94	2.08	0.72
10	78.	2.87	1.80	0.60	3.58	0.18	2.50	1.31	0.44
11	78.	5.81	4.10	2.53	6.41	1.74	4.69	3.12	2.29
12	78.	7.44	5.38	3.68	7.94	2.69	5.88	4.18	3.49
MO	POOL TEMP	BARE	WB	COV	SCR	C&WB	S&WB	S&C	ALL
1	80.	8.94	6.44	4.46	9.48	3.24	6.98	5.00	4.18
2	80.	9.14	6.38	4.27	9.82	2.96	7.05	4.94	3.89
3	80.	7.61	5.09	3.03	8.46	1.89	5.95	3.89	2.67
4	80.	5.74	3.64	1.59	6.76	0.71	4.66	2.61	1.18
5	80.	3.18	1.77	0.11	4.26	-0.43	2.84	1.19	-0.09
10	80.	3.82	2.51	1.12	4.53	0.57	3.21	1.82	0.88
11	80.	6.76	4.80	3.04	7.35	2.13	5.39	3.63	2.73
12	80.	8.38	6.08	4.20	8.88	3.08	6.58	4.70	3.92
MO	POOL TEMP	BARE	WB	COV	SCR	C&WB	S&WB	S&C	ALL
1	82.	9.94	7.18	4.99	10.48	3.65	7.72	5.53	4.63
2	82.	10.19	7.15	4.83	10.86	3.38	7.82	5.50	4.35
3	82.	8.66	5.86	3.59	9.52	2.31	6.71	4.45	3.13
4	82.	6.76	4.39	2.13	7.79	1.12	5.42	3.16	1.63
5	82.	4.17	2.50	0.64	5.25	-0.02	3.58	1.71	0.35
10	82.	4.81	3.24	1.65	5.51	0.98	3.94	2.35	1.32
11	82.	7.74	5.53	3.56	8.33	2.54	6.12	4.15	3.17
12	82.	9.36	6.81	4.72	9.86	3.49	7.31	5.22	4.36

LOCATION - TALLAHASSEE
100% Solar Exposure

SWIMMING POOL HEAT LOSSES
IN MILLONS OF BTU/100 FT SQ

MO	POOL TEMP	BARE	WB	COV	SCR	C&WB	S&WB	S&C	ALL
1	78.	8.35	6.05	4.20	9.14	3.01	6.84	4.99	4.64
2	78.	7.74	5.40	3.46	8.76	2.29	6.43	4.48	3.94
3	78.	6.06	3.85	1.93	7.39	0.88	5.19	3.27	2.45
4	78.	3.19	1.58	-0.26	4.83	-0.96	3.22	1.38	0.34
5	78.	0.57	-0.45	-1.95	2.31	-2.34	1.29	-0.21	-1.26
10	78.	2.82	1.63	0.22	4.00	-0.31	2.82	1.41	0.68
11	78.	5.84	4.21	2.55	6.75	1.73	5.11	3.46	3.04
12	78.	7.76	5.76	3.97	8.49	2.93	6.49	4.70	4.43
MO.	POOL TEMP	BARE	WB	COV	SCR	C&WB	S&WB	S&C	ALL
1	80.	9.24	6.72	4.68	10.03	3.39	7.51	5.47	5.06
2	80.	8.64	6.08	3.95	9.66	2.67	7.11	4.97	4.37
3	80.	6.99	4.55	2.44	8.32	1.27	5.88	3.77	2.88
4	80.	4.06	2.25	0.22	5.71	-0.58	3.89	1.86	0.76
5	80.	1.41	0.20	-1.49	3.15	-1.97	1.94	0.25	-0.85
10	80.	3.66	2.29	0.68	4.85	0.06	3.47	1.87	1.08
11	80.	6.67	4.85	3.00	7.58	2.09	5.76	3.91	3.44
12	80.	8.60	6.41	4.43	9.33	3.30	7.14	5.16	4.83
MO	POOL TEMP	BARE	WB	COV	SCR	C&WB	S&WB	S&C	ALL
1	82.	10.16	7.43	5.18	10.95	3.78	8.21	5.97	5.48
2	82.	9.57	6.79	4.45	10.59	3.06	7.82	5.48	4.79
3	82.	7.95	5.27	2.95	9.28	1.67	6.60	4.29	3.32
4	82.	4.98	2.94	0.71	6.62	-0.19	4.58	2.36	1.18
5	82.	2.28	0.87	-1.02	4.02	-1.59	2.62	0.73	-0.45
9	82.	1.05	0.18	-1.10	2.39	-1.44	1.52	0.25	-0.58
10	82.	4.54	2.96	1.16	5.72	0.44	4.15	2.34	1.49
11	82.	7.53	5.52	3.47	8.44	2.47	6.43	4.38	3.84
12	82.	9.48	7.09	4.91	10.21	3.68	7.82	5.64	5.24

LOCATION - TALLAHASSEE
60% Solar Exposure

SWIMMING POOL HEAT LOSSES
IN MILLONS OF BTU/100 FT SQ

MO	POOL TEMP	BARE	WB	COV	SCR	C&WB	S&WB	S&C	ALL
1	78.	9.14	6.84	4.99	9.61	3.80	7.31	5.46	5.11
2	78.	8.76	6.43	4.48	9.38	3.31	7.04	5.10	4.56
3	78.	7.39	5.19	3.27	8.19	2.21	5.99	4.07	3.25
4	78.	4.83	3.22	1.38	5.81	0.68	4.20	2.37	1.33
5	78.	2.31	1.29	-0.21	3.36	-0.59	2.33	0.84	-0.21
10	78.	4.00	2.82	1.41	4.71	0.88	3.53	2.12	1.39
11	78.	6.75	5.11	3.46	7.30	2.64	5.66	4.00	3.59
12	78.	8.49	6.49	4.70	8.93	3.66	6.93	5.14	4.87
MO	POOL TEMP	BARE	WB	COV	SCR	C&WB	S&WB	S&C	ALL
1	80.	10.03	7.51	5.47	10.50	4.18	7.99	5.94	5.53
2	80.	9.66	7.11	4.97	10.27	3.69	7.72	5.59	4.98
3	80.	8.32	5.88	3.77	9.12	2.60	6.68	4.57	3.68
4	80.	5.71	3.89	1.86	6.69	1.06	4.87	2.85	1.74
5	80.	3.15	1.94	0.25	4.20	-0.23	2.98	1.30	0.19
10	80.	4.85	3.47	1.87	5.56	1.25	4.18	2.58	1.79
11	80.	7.58	5.76	3.91	8.12	3.00	6.30	4.46	3.98
12	80.	9.33	7.14	5.16	9.77	4.03	7.58	5.60	5.27
MO	POOL TEMP	BARE	WB	COV	SCR	C&WB	S&WB	S&C	ALL
1	82.	10.95	8.21	5.97	11.43	4.57	8.69	6.44	5.95
2	82.	10.59	7.82	5.48	11.21	4.09	8.43	6.09	5.40
3	82.	9.28	6.60	4.29	10.08	3.00	7.40	5.09	4.11
4	82.	6.62	4.58	2.36	7.60	1.45	5.57	3.34	2.16
5	82.	4.02	2.62	0.73	5.07	0.15	3.66	1.77	0.59
9	82.	2.39	1.52	0.25	3.20	-0.10	2.33	1.05	0.23
10	82.	5.72	4.15	2.34	6.44	1.63	4.86	3.06	2.20
11	82.	8.44	6.43	4.38	8.99	3.38	6.98	4.92	4.38
12	82.	10.21	7.82	5.64	10.65	4.41	8.26	6.08	5.68

LOCATION - TAMPA
100% Solar Exposure

SWIMMING POOL HEAT LOSSES
IN MILLONS OF BTU/100 FT SQ

MO	POOL TEMP	BARE	WB	COV	SCR	C&WB	S&WB	S&C	ALL
1	78.	6.76	4.59	2.89	7.67	1.83	5.50	3.80	3.13
2	78.	6.39	4.09	2.31	7.52	1.22	5.23	3.45	2.61
3	78.	4.66	2.58	0.85	6.10	-0.10	4.01	2.28	1.27
4	78.	2.50	0.80	-0.93	4.22	-1.62	2.52	0.79	-0.48
10	78.	1.70	0.59	-0.66	2.91	-1.09	1.80	0.55	-0.39
11	78.	4.60	2.94	1.42	5.60	0.66	3.93	2.42	1.63
12	78.	6.49	4.44	2.79	7.33	1.80	5.29	3.63	2.96
MO	POOL TEMP	BARE	WB	COV	SCR	C&WB	S&WB	S&C	ALL
1	80.	7.71	5.30	3.41	8.62	2.22	6.21	4.32	3.57
2	80.	7.38	4.82	2.85	8.51	1.62	5.95	3.98	3.06
3	80.	5.67	3.31	1.39	7.10	0.31	4.75	2.82	1.73
4	80.	3.49	1.53	-0.39	5.21	-1.21	3.24	1.33	-0.02
5	80.	1.30	-0.12	-1.79	3.10	-2.32	1.68	0.01	-1.34
10	80.	2.66	1.30	-0.14	3.87	-0.70	2.51	1.07	0.06
11	80.	5.55	3.64	1.94	6.54	1.05	4.64	2.93	2.07
12	80.	7.44	5.15	3.31	8.28	2.20	5.99	4.15	3.40
MO	POOL TEMP	BARE	WB	COV	SCR	C&WB	S&WB	S&C	ALL
1	82.	8.70	6.04	3.94	9.61	2.63	6.95	4.85	4.02
2	82.	8.40	5.57	3.40	9.54	2.04	6.71	4.53	3.52
3	82.	6.71	4.08	1.94	8.15	0.73	5.51	3.38	2.19
4	82.	4.53	2.28	0.16	6.25	-0.80	4.00	1.88	0.44
5	82.	2.31	0.62	-1.26	4.10	-1.91	2.42	0.54	-0.89
10	82.	3.66	2.04	0.39	4.87	-0.29	3.25	1.61	0.50
11	82.	6.53	4.37	2.46	7.52	1.46	5.37	3.46	2.51
12	82.	8.42	5.88	3.84	9.27	2.60	6.73	4.68	3.85

LOCATION - TAMPA
60% Solar Exposure

SWIMMING POOL HEAT LOSSES
IN MILLONS OF BTU/100 FT SQ

MO	POOL TEMP	BARE	WB	COV	SCR	C&WB	S&WB	S&C	ALL
1	78.	7.67	5.50	3.80	8.21	2.74	6.05	4.34	3.68
2	78.	7.52	5.23	3.45	8.20	2.35	5.91	4.13	3.29
3	78.	6.10	4.01	2.28	6.96	1.33	4.87	3.14	2.13
4	78.	4.22	2.52	0.79	5.25	0.10	3.55	1.82	0.55
10	78.	2.91	1.80	0.55	3.64	0.12	2.53	1.28	0.34
11	78.	5.60	3.93	2.42	6.20	1.66	4.53	3.02	2.23
12	78.	7.33	5.29	3.63	7.84	2.64	5.79	4.14	3.47
MO	POOL TEMP	BARE	WB	COV	SCR	C&WB	S&WB	S&C	ALL
1	80.	8.62	6.21	4.32	9.17	3.13	6.76	4.86	4.12
2	80.	8.51	5.95	3.98	9.19	2.76	6.63	4.66	3.74
3	80.	7.10	4.75	2.82	7.96	1.74	5.61	3.68	2.59
4	80.	5.21	3.24	1.33	6.24	0.51	4.28	2.36	1.01
5	80.	3.10	1.68	0.01	4.18	-0.52	2.76	1.09	-0.26
10	80.	3.87	2.51	1.07	4.60	0.52	3.24	1.80	0.78
11	80.	6.54	4.64	2.93	7.14	2.05	5.24	3.53	2.67
12	80.	8.28	5.99	4.15	8.78	3.04	6.50	4.65	3.91
MO	POOL TEMP	BARE	WB	COV	SCR	C&WB	S&WB	S&C	ALL
1	82.	9.61	6.95	4.85	10.16	3.54	7.49	5.39	4.56
2	82.	9.54	6.71	4.53	10.22	3.17	7.39	5.21	4.20
3	82.	8.15	5.51	3.38	9.01	2.16	6.37	4.24	3.05
4	82.	6.25	4.00	1.88	7.28	0.92	5.03	2.91	1.47
5	82.	4.10	2.42	0.54	5.18	-0.11	3.50	1.62	0.19
10	82.	4.87	3.25	1.61	5.60	0.92	3.98	2.33	1.23
11	82.	7.52	5.37	3.46	8.12	2.45	5.97	4.06	3.11
12	82.	9.27	6.73	4.68	9.77	3.44	7.23	5.18	4.35

LOCATION - WEST PALM BEACH
100% Solar Exposure

SWIMMING POOL HEAT LOSSES
IN MILLONS OF BTU/100 FT SQ

MO	POOL TEMP	BARE	WB	COV	SCR	C&WB	S&WB	S&C	ALL
1	78.	5.65	3.67	2.09	6.55	1.17	4.57	2.99	2.15
2	78.	5.43	3.31	1.65	6.54	0.68	4.42	2.76	1.78
3	78.	3.79	1.87	0.26	5.19	-0.57	3.27	1.66	0.53
4	78.	2.11	0.47	-1.10	3.74	-1.75	2.10	0.53	-0.75
11	78.	3.82	2.26	0.86	4.78	0.18	3.22	1.81	0.85
12	78.	5.48	3.55	1.99	6.35	1.10	4.41	2.85	1.95
MO	POOL TEMP	BARE	WB	COV	SCR	C&WB	S&WB	S&C	ALL
1	80.	6.65	4.40	2.63	7.55	1.58	5.30	3.53	2.61
2	80.	6.46	4.06	2.20	7.57	1.09	5.17	3.31	2.25
3	80.	4.84	2.63	0.82	6.24	-0.15	4.03	2.22	1.01
4	80.	3.17	1.23	-0.53	4.81	-1.32	2.87	1.10	-0.27
5	80.	0.74	-0.47	-1.81	2.40	-2.27	1.20	-0.15	-1.24
10	80.	1.94	0.76	-0.47	3.05	-0.92	1.87	0.64	-0.36
11	80.	4.84	3.00	1.40	5.79	0.59	3.95	2.36	1.32
12	80.	6.50	4.29	2.54	7.36	1.51	5.15	3.40	2.41
MO	POOL TEMP	BARE	WB	COV	SCR	C&WB	S&WB	S&C	ALL
1	82.	7.70	5.16	3.19	8.60	2.00	6.06	4.09	3.07
2	82.	7.53	4.83	2.77	8.64	1.52	5.94	3.88	2.72
3	82.	5.94	3.42	1.41	7.34	0.28	4.82	2.81	1.49
4	82.	4.28	2.03	0.05	5.92	-0.89	3.66	1.69	0.21
5	82.	1.78	0.29	-1.26	3.44	-1.85	1.95	0.40	-0.79
10	82.	3.01	1.54	0.10	4.11	-0.50	2.64	1.20	0.11
11	82.	5.90	3.77	1.96	6.85	1.02	4.72	2.92	1.78
12	82.	7.56	5.06	3.10	8.42	1.94	5.92	3.96	2.88

LOCATION - WEST PALM BEACH
60% Solar Exposure

SWIMMING POOL HEAT LOSSES
IN MILLONS OF BTU/100 FT SQ

MO	POOL TEMP	BARE	WB	COV	SCR	C&WB	S&WB	S&C	ALL
1	78.	6.55	4.57	2.99	7.09	2.07	5.11	3.53	2.69
2	78.	6.54	4.42	2.76	7.21	1.79	5.09	3.42	2.44
3	78.	5.19	3.27	1.66	6.03	0.83	4.11	2.50	1.37
4	78.	3.74	2.10	0.53	4.72	-0.11	3.08	1.51	0.23
11	78.	4.78	3.22	1.81	5.35	1.14	3.79	2.38	1.43
12	78.	6.35	4.41	2.85	6.86	1.96	4.93	3.37	2.47
MO	POOL TEMP	BARE	WB	COV	SCR	C&WB	S&WB	S&C	ALL
1	80.	7.55	5.30	3.53	8.09	2.48	5.84	4.07	3.15
2	80.	7.57	5.17	3.31	8.24	2.20	5.83	3.98	2.91
3	80.	6.24	4.03	2.22	7.08	1.25	4.87	3.07	1.85
4	80.	4.81	2.87	1.10	5.79	0.31	3.85	2.08	0.71
5	80.	2.40	1.20	-0.15	3.40	-0.61	2.19	0.85	-0.25
10	80.	3.05	1.87	0.64	3.71	0.18	2.53	1.30	0.30
11	80.	5.79	3.95	2.36	6.37	1.55	4.53	2.93	1.89
12	80.	7.36	5.15	3.40	7.88	2.38	5.67	3.92	2.93
MO	POOL TEMP	BARE	WB	COV	SCR	C&WB	S&WB	S&C	ALL
1	82.	8.60	6.06	4.09	9.14	2.90	6.60	4.63	3.61
2	82.	8.64	5.94	3.88	9.31	2.63	6.61	4.55	3.38
3	82.	7.34	4.82	2.81	8.18	1.68	5.66	3.65	2.33
4	82.	5.92	3.66	1.69	6.90	0.75	4.64	2.67	1.19
5	82.	3.44	1.95	0.40	4.43	-0.19	2.95	1.40	0.21
10	82.	4.11	2.64	1.20	4.77	0.60	3.30	1.86	0.77
11	82.	6.85	4.72	2.92	7.42	1.97	5.30	3.49	2.35
12	82.	8.42	5.92	3.96	8.94	2.80	6.44	4.48	3.40